SCIENCE – CODE NO. 086
SAMPLE QUESTION PAPER*
CLASS – X (2026-27)

Max. Marks: 80 **Time Allowed: 3 hours**

General Instructions:

(i) This question paper consists of 39 questions in 3 sections. Section A is Biology, Section B is Chemistry and Section C is Physics.

(ii) All questions are compulsory. However, an internal choice is provided in some questions. A student is expected to attempt only one of the alternatives in these questions.

	Section – A	
1	During photosynthesis, what happens to carbon dioxide and water as glucose is formed? A. Carbon dioxide gains hydrogen, while water loses electrons. B. Carbon dioxide loses oxygen, while water gains oxygen. C. Carbon dioxide is oxidised, while water is reduced. D. Both carbon dioxide and water undergo reduction.	1
2	Lime water turns cloudy in the presence of a gas, which is a by-product of respiration. Shown below are four setups kept in sunlight for 24 hours. In which setup is lime water expected to be the cloudiest? 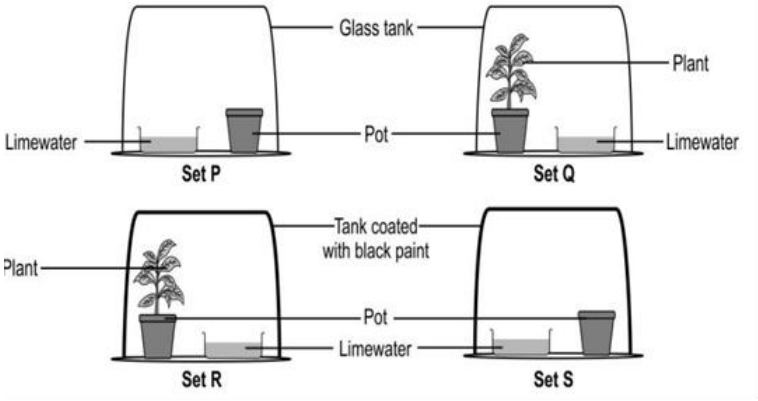 A. P B. Q C. R D. S - - - - - - - - - - - - - - <u>*For visually impaired students*</u> Which of the following statement is **incorrect** concerning the experiment to show that sunlight is necessary for photosynthesis? A. The leaf should be destarched before conducting the experiment. B. The leaf kept in darkness will show the presence of starch. C. The leaf exposed to sunlight will show the presence of starch. D. Starch is the end product of photosynthesis.	1

**There is no change in the Question Paper Design and Assessment Pattern for Academic Session 2026-27.*

3	During urine formation, tubular reabsorption and secretion take place in the kidneys. Which of the following sets correctly indicates both the substances that are reabsorbed in the kidneys? A. Glucose and salts B. Glucose and starch C. Glycogen and salts D. Glycogen and starch	1
4	In a controlled experiment, the anthers of a mustard plant's flowers were carefully removed in the bud stage before they matured. The bud was covered with a paper bag. What will be the most likely result for these flowers? A. They will still produce seeds and fruit through self-pollination. B. They will attract more insects and produce larger flowers but no fruit. C. They will not produce any seeds or fruits. D. They will produce seeds and fruits that are genetically identical to the parent.	1
5	The Vas deferens and the Oviduct are both targets for surgical contraception (Vasectomy and Tubectomy respectively). Analysing the process of reproduction, what common biological event is prevented by blocking both these structures? A. The production of gametes (sperm and egg). B. The implantation of the fertilized egg into the uterine wall. C. The successful meeting and fusion of the male and the female gametes. D. The release of hormones - testosterone and estrogen.	1
6	The male gamete of an apple plant has seventeen chromosomes. What is the number of chromosomes in the female gamete and in the cells of the adult plant respectively? A. 17,17 B. 17,34 C. 34,34 D. 34,51	1
7	A fish living in a pond ecosystem feeds on small aquatic insects (larvae). These insect larvae, in turn, feed on green algae and small photosynthetic bacteria. In this specific food chain, what is the trophic level classification of fish? A. Producer B. Primary Consumer C. Secondary Consumer D. Tertiary Consumer	1
The following two questions consist of two statements – **Assertion** (A) and **Reason** (R). Answer these questions by selecting the appropriate option given below: A. Both A and R are true, and R is the correct explanation of A. B. Both A and R are true, and R is not the correct explanation of A.		

**There is no change in the Question Paper Design and Assessment Pattern for Academic Session 2026-27.*

	C. A is true but R is false. D. A is false but R is true.	
8	**Assertion (A):** The rate of breathing in aquatic organisms is much lower than in the terrestrial organisms. **Reason (R):** The amount of oxygen dissolved in water is less as compared to the amount of oxygen in air.	1
9	**Assertion (A):** In an ecosystem, 1% of energy is available for transfer from one trophic level to the next. **Reason (R)**: An average of 10% of the food eaten by organisms is available for flow in the form of chemical energy.	1
10	A. Due to narrowing of the bile duct, the bile secretion from the liver to the small intestine was obstructed. How will the process of digestion be affected? B. How does the length of the intestine depend on the nature of food habit in different animals?	2
11	*Students to attempt either option A or B.* A. Which parts of the brain perform certain actions for which we do not have any thinking control? What are such actions called, give two examples. **OR** B. How is the information of touch in the '**sensitive plant'** controlled and coordinated?	2
12	What changes are observed in the uterus subsequent to implantation of the young embryo in a human female?	2
13	How do muscles move at the cellular level and respond when processed messages are received from the brain?	3
14	Study the food chain given below: Phytoplankton → zooplankton → small fishes → large fish A. In the given food chain, the amount of energy available at the fourth trophic level is 10 kJ, what will be the energy available at the producer level? B. Is it possible to have three more trophic levels in the above food chain? Justify. C. Which of these trophic levels will have the maximum amount of pesticide, if it had washed down in the water body from agricultural fields. Why?	3
15	In order to study patterns of inheritance, Neha had performed typical Mendelian experiments with pea plants in the field. In experiment one, she crossed a pea plant having white flowers (vv) with another pea plant bearing violet flowers (VV). In another experiment, in addition to the colour of the flower she also focussed on the height of the pea plant. This time she crossed a pea plant having violet flowers and tall height (VVTT) with another pea plant having white flowers and short height (vvtt).	4

**There is no change in the Question Paper Design and Assessment Pattern for Academic Session 2026-27.*

	What percentage is expected for the following traits as a result of these experiments? Give a reason. A. Violet flowers in F1 and F2 generation in experiment one? (1) B. Tall height plants with white flowers in F2 generation in experiment two? (1) *Attempt either sub-part C or D.* C. Percentage of medium height plants with light violet flowers in F1 and F2 generations in experiment two? Give a reason. **OR** D. Percentage of short height plants with white flowers in F1 and F2 generations in experiment two? (2)	
16	*Attempt either option A or B*  A. Observe the structure of hearts A, B and C shown above and answer the following questions I. Which of the hearts depicted above is present in both birds and Mammals and how are they able to maintain their body temperature? Give reason for your answer. II. Which of the hearts depicted above is present in fishes, how does circulation of blood take place in them? **OR** B. I. Observe both the diagrams A and B. Which diagram indicates inhalation? Describe how it occurs. 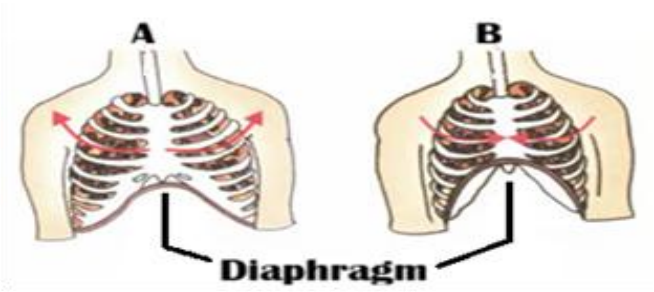 II. If diffusion were to move oxygen in our body, it is estimated that it would take 3 years for a molecule of oxygen to get to our toes from our lungs. Then, how is oxygen delivered to all parts of our body? - - - - - - - - - - - - - - *For visually impaired students* A. I. How many chambers are present in the hearts of birds and mammals and how are they able to maintain their body temperature? Give reason for your answer	5

**There is no change in the Question Paper Design and Assessment Pattern for Academic Session 2026-27.*

	II. How many chambers are present in the heart of fishes, how does circulation of blood take place in them? **OR** B. I. Describe the process of inhalation and also mention how are the lungs designed in human beings to maximise the area for exchange of gases? II. If diffusion were to move oxygen in our body, it is estimated that it would take 3 years for a molecule of oxygen to get to our toes from our lungs then, how is oxygen delivered to all parts of our body?	
Section – B		
17	Chameleons contain crystals that reflect light and produce colour. Adjusting the spacing between these crystals, they can alter the wavelengths of light reflected, thus changing their skin colour. Based on the above information, we can infer that the change in colour by chameleons is a: A. chemical change because change in colour takes place. B. chemical change because wavelength of reflected light changes. C. physical change because the space between crystals is adjusted. D. physical change because light is reflected by crystals.	1
18	Rishita summarizes the chlor-alkali process in the following table. **Option** / **Product** / **Formed** / **Use** I / Hydrogen / At cathode / Used as a fuel II / Chlorine / At anode / Used to make margarines III / Sodium Hydroxide / Near cathode / To make soap IV / Sodium Hydroxide / Near anode / To make bleaching powder Identify the options that are correctly matched. A. I, II and III B. I and III C. II and IV D. I, II, III and IV	1
19	Manjeet wants to wash clothes, but the water available is hard. He compares the action of soap and detergent in hard water, to decide which one to use for washing his clothes. He observes: • Soap forms scum in hard water. • Detergent produces lather easily in hard water. Which of the following inferences is correct? A. Ca^{2+} and Mg^{2+} ions react with soap, forming insoluble compounds, whereas detergents do not form such insoluble salts. B. Soap is acidic, and detergents are basic.	1

**There is no change in the Question Paper Design and Assessment Pattern for Academic Session 2026-27.*

	C. Soap react with Na^+ ions in hard water to form scum while detergents do not react with Na^+ ions. D. Detergents form lather easily because they are ionic compounds and react with Ca^{2+} and Mg^{2+} ions while soaps do not react with hard water.	
20	Which of the following salts contain water of crystallisation: (i) Plaster of Paris, (ii) Washing soda, (iii) Baking soda and (iv) Gypsum. A. (i), (ii) and (iii) B. (i), (iii) and (iv) C. (ii), (iii) and (iv) D. (i), (ii) and (iv)	1
21	Which of the following pair of compounds are isomers? A. 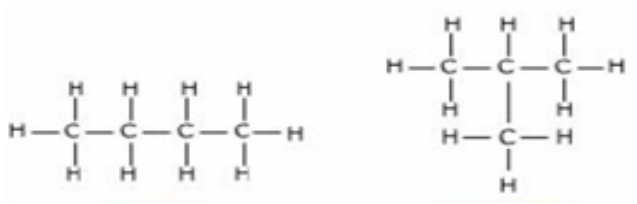 B. 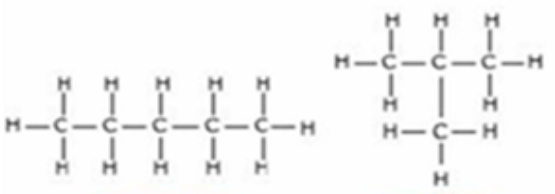 C. 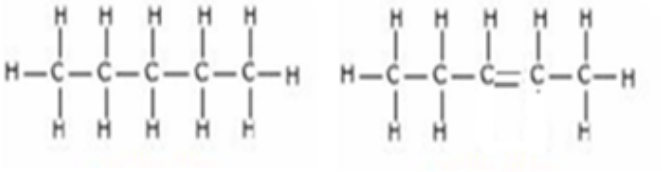 D. 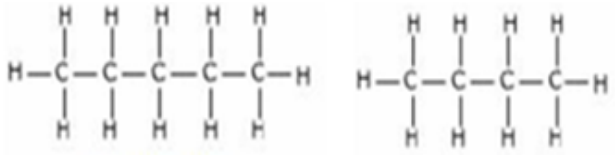 - - - - - - - - - - - - - - *For visually impaired students* The unsaturated hydrocarbon with three carbon atoms is: A. propene B. propane C. pentane D. pentene	1

*There is no change in the Question Paper Design and Assessment Pattern for Academic Session 2026-27.

22	A food label is given below. E304 and E307b are added to the flavoured biscuits.  **FLAVOURED BISCUITS** **Wheat** Flour, Vegetable Oil, Sugar, Salt, Malt Extract (From **Barley**), Baking Powder, Flavour Enhancers (E621, E635), Onion Powder, Natural Flavour, Maltodextrin (Maize), Chicken, Spices, Antioxidants (E304, E307b From **Soy**), Emulsifier (**Soy** Lecithin). **CONTAINS SOY AND GLUTEN CONTAINING CEREALS.** **MAY CONTAIN TRACES OF EGG, MILK, PEANUT, SESAME AND TREE NUT.** Which of the following is added to food packets for the same reason? A. salt B. vinegar C. nitrogen D. vanilla - - - - - - - - - - - - - - <u>*For visually impaired students*</u> In the food industry nitrogen is used as a/an A. preservative. B. oxidising agent. C. antioxidant. D. colouring agent.	1
23	Electrical wires made of aluminum A. corrode easily as aluminium is a very reactive metal. B. corrode easily because porous flaky aluminium oxide is formed. C. do not corrode easily as aluminium oxide forms a protective layer. D. do not corrode easily as aluminium is less reactive than metals like sodium, magnesium and zinc.	1
The following question consists of two statements – **Assertion** (A) and **Reason** (R). Answer this question by selecting the appropriate option given below: A. Both A and R are true, and R is the correct explanation of A. B. Both A and R are true, and R is not the correct explanation of A. C. A is true but R is false. D. A is false but R is true.		
24	**Assertion (A):** Onion extract loses its smell, when it is added to baking soda solution whereas it retains its smell when added to lemon juice. **Reason (R):** Onion acts as an olfactory indicator.	1

**There is no change in the Question Paper Design and Assessment Pattern for Academic Session 2026-27.*

25	Carbon forms millions of compounds whereas silicon, which is just below it in the Periodic Table, forms a few compounds. Explain the reason for the difference in their ability to form compounds.	2
26	*Attempt either option A or B.* A. An organic compound "X" with formula C_2H_6O is used to blend with petrol in order to reduce the dependence on fossil fuels and lower down the harmful emissions from the cars. It is also used as a solvent in medicines such as tincture iodine, cough syrups and many tonics. (i) Draw the electron dot structure of "X". (ii) Write the name and formula of the next homologue of "X". (iii) Write the reaction of "X" with acetic acid to form a sweet smelling substance. **OR** B. Ramya performs an experiment in the following two steps: Step 1: Heats ethanol with conc. H_2SO_4 at 170°C to get product A. Step 2: Passes hydrogen gas over product A, using Ni as a catalyst and gets product B. (i) Name the products A and B. (ii) Write the reactions involved in both the steps. - - - - - - - - - - - - - - *For visually impaired students* *Attempt either option A or B.* A. An organic compound "X" with formula C_2H_6O is used to blend with petrol in order to reduce the dependence on fossil fuels and lower down the harmful emissions from the cars. It is also used as a solvent in medicines such as tincture iodine, cough syrups and many tonics. (i) Name the compound "X". (ii) Write the formula of the next homologue of "X". (iii) Write the reaction of "X" with acetic acid to form a sweet smelling substance. **OR** B. Ramya performs an experiment in the following two steps: Step 1: Heats ethanol with conc. H_2SO_4 at 170°C to get product A. Step 2: Passes hydrogen gas over product A, using Ni as a catalyst and gets product B. (i) Name the products A and B. (ii) Write the reactions involved in both the steps.	3
27	Give reason for the following : A. A solution of sports electrolyte drink conducts electricity, but coconut oil does not.	3

**There is no change in the Question Paper Design and Assessment Pattern for Academic Session 2026-27.*

	B. Milkiness disappears when excess of carbon dioxide is passed through lime water. C. An iron bridge near the sea rusts much faster than an iron bridge located in a dry hilly region.	
28	Aavya and Vihan are studying the properties of metals in school. They decide to design and conduct an experiment to test the relative conduction of heat by metals. They use the apparatus (Figure) with rods of five different metals aluminium, silver, copper, iron and zinc attached to a central point. This central point is heated using a burner. The metal rods are of equal length and thickness. They observe that the candles at the end of the rods fall at different times. (Study the graph)  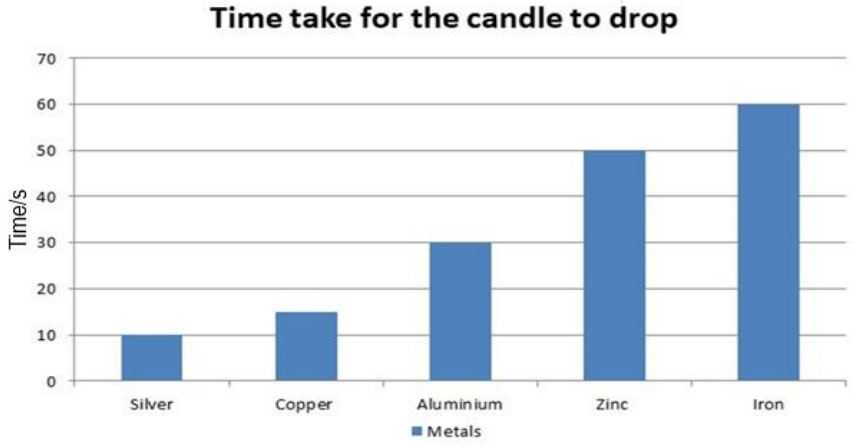 A. On the basis of the graph obtained, which metal is the best conductor of heat? B. Gold is a better conductor of heat than aluminium but it is not as good as copper. The time taken for the candle to drop if one of the rods were made of gold would have been: (i) 15 s (ii) 20 s (iii) 35 s (iv) 10 s *Attempt either sub-part C or D.* C. The length of all the metal rods is increased by 20% without any change in the thickness. Will the time required for the candles to drop be affected? How and why?	4

**There is no change in the Question Paper Design and Assessment Pattern for Academic Session 2026-27.*

	OR D. Mayank tries the experiment with an apparatus similar to figure (1). He ensures the length of all metal rods is the same. However, the thickness of rods is not the same in his apparatus. Will the inference he draws on the basis of his experiment be correct? Justify your answer. - - - - - - - - - - - - - - *For visually impaired students* Aavya and Vihan are studying the properties of metals in school. They decide to design and conduct an experiment to test the relative conduction of heat by metals. They use rods of equal length and thickness made of five different metals – A, B, C, D and E. A heat sensor is attached at one end of each rod. The other end of the rod is heated and time required for the heat sensor to beep is noted for all metal rods. The heat sensor at the end of B rod beeps in 10 seconds, C rod in 15 seconds, A a 30 seconds, E in 50 seconds and D sensor beeps in 60 seconds. A. On the basis of the experimental result, which metal is the best conductor of heat? B. Metal G is a better conductor of heat than metal A but it is not as good as metal C. The time taken for the sensor to beep if one of the rods were made of G would have been: (i) 15 s (ii) 20 s (iii) 35 s (iv) 10 s *Attempt either sub-part C or D.* C. The length of all the metal rods is increased by 20% without any change in the thickness. Will the time required for the sensor to beep be affected? How and why? **OR** D. Mayank tries the experiment with little variation. He keeps the length of all the rods of the same length, but, the thickness of rods is not the same. Will the inference he draws on the basis of his experiment be correct? Justify your answer.	
29	*Attempt either option A or B.* A. I. Refer to the dialogue between Alisha, Drishti and Bhushan in the chemistry lab. They are discussing rusting of iron and formation of ammonia gas. Who all do you agree with and why? Alisha: The formation of ammonia by reaction of nitrogen with hydrogen is a reduction reaction. Dristhti: Both rusting of iron and formation of ammonia are redox reactions. Bhushan: Rusting of iron is an oxidation reaction.	5

**There is no change in the Question Paper Design and Assessment Pattern for Academic Session 2026-27.*

	II. Assess the following chemical equations. Identify the error(s) and rewrite the equation after correction. (i) $MgCl_2 + AgNO_3 \rightarrow AgCl_2 + MgNO_3$ (ii) $Al + H_2SO_4 \rightarrow Al_2SO_4 + H_2O$ **OR** B. I. Refer to the dialogue between Daljeet and Avik in the chemistry lab. They have learnt about decomposition reactions. Who has understood decomposition reactions correctly? Justify your answer. Daljeet: During a decomposition reaction, a substance decomposes to give two simpler compounds. $MgCO_3$ decomposes on heating to magnesium oxide and carbon dioxide. Avik: No, during a decomposition reaction, a substance decomposes to give two elements. Water on electrolysis gives hydrogen and oxygen, both are elements. II. Analyse the observations given in following two cases. Are these observations correct? Give reasons to support your answer. (i) Iron fillings are added to an aqueous solution of magnesium sulphate. Observation: The colourless solution turns greenish due to formation of iron sulphate. (ii) Aluminium metal is added to dilute sulphuric acid Observation: Brisk effervescence are seen due to evolution of a gas.	
Section – C		
30	A student wants to determine the focal length of a convex lens using sunlight. Which of the following practical procedures will give the most accurate result? A. Move the lens close to a wall and measure the blurred circle. B. Hold the lens above a sheet of paper and adjust until the smallest, brightest spot is formed. C. Measure the thickness of the lens with a scale. D. Look through the lens at a distant object.	1
31	An electrical appliance rated 1000 W is operated at 250 V. What current does it draw? A. 0.25 A B. 2.5 A C. 4.0 A D. 10 A	1
The following one question consists of two statements – **Assertion** (A) and **Reason** (R). Answer these questions by selecting the appropriate option given below: A. Both A and R are true, and R is the correct explanation of A. B. Both A and R are true, and R is not the correct explanation of A.		

**There is no change in the Question Paper Design and Assessment Pattern for Academic Session 2026-27.*

	C. A is true but R is false. D. A is false but R is true.	
32	**Assertion** (A): The apparent depth of a coin in water is less than its real depth. **Reason** (R): Light bends away from the normal when it travels from water to air.	1
33	A. State Snell's Law of refraction. B. Define the refractive index of a material with respect to another material giving the mathematical expression.	2
34	*Attempt either option A or B.* A. I. State Joule's Law of heating. II. What happens to the heat produced in a conductor if the resistance is doubled while keeping other variables constant? **Or** B. I. Define resistivity. II. Justify with an example why resistivity is an intrinsic property of a material.	2
35	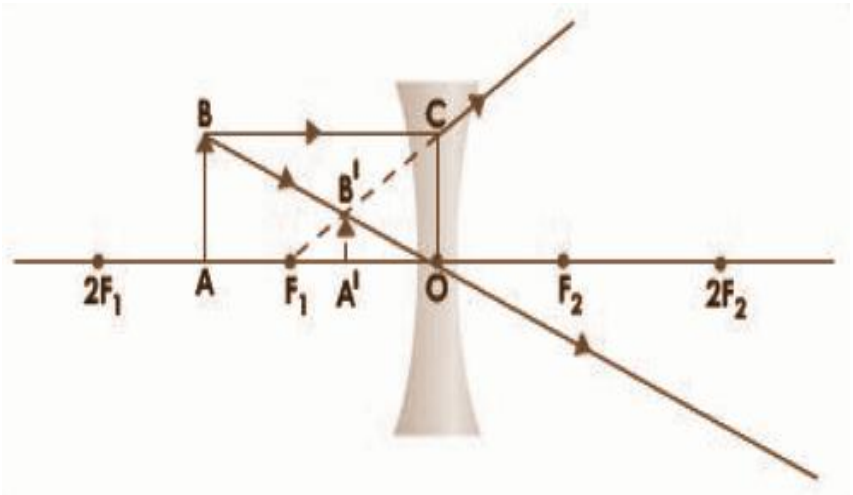 A concave lens forms an image that is 1/3rd the size of the object, as shown in the diagram. If the object is placed 24 cm in front of the lens, determine: A. the type of lens. B. the image distance C. the focal length of the lens - - - - - - - - - - - - - - *For visually impaired students* A student places an object 24 cm from a convex lens of focal length 12 cm. Calculate the image position and determine whether the image is real or virtual.	3
36	A. State the Right-Hand Thumb Rule and describe how it helps determine the direction of magnetic field around a current-carrying conductor. B. Explain how the magnetic field changes with distance from the conductor.	3

**There is no change in the Question Paper Design and Assessment Pattern for Academic Session 2026-27.*

37	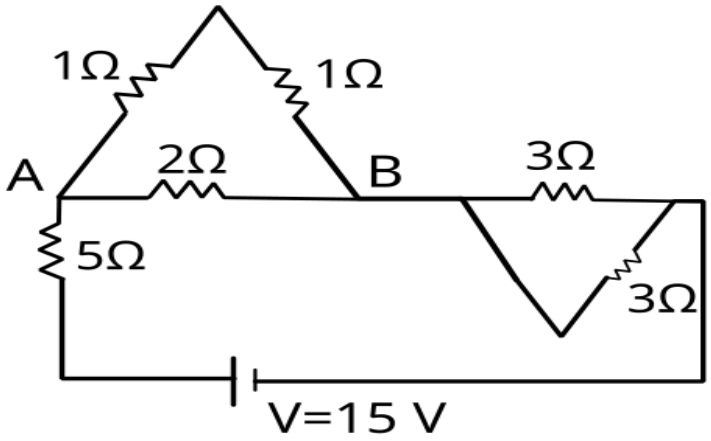 The figure shows a circuit with a 15 V battery connected to several resistors. Using the given circuit diagram: A. Find the total current supplied by the battery. B. Calculate the potential difference between points A and B. - - - - - - - - - - - - - - *For visually impaired students* A 15 V battery is connected in series with three resistors of 2 Ω, 3 Ω, and 5 Ω. Calculate: A. The total resistance in the circuit. B. The total current supplied by the battery. C. The voltage drop across the 3Ω resistor.	3
38	A school has installed an automatic electromagnetic door-locking system at the main entrance. The locking mechanism uses a solenoid controlled by a switch at the security desk. When electricity flows through the solenoid, it creates a magnetic field strong enough to pull an iron bolt, unlocking the door. As soon as the switch is turned off, the magnetic field disappears, and a spring pushes the bolt back, locking the door. 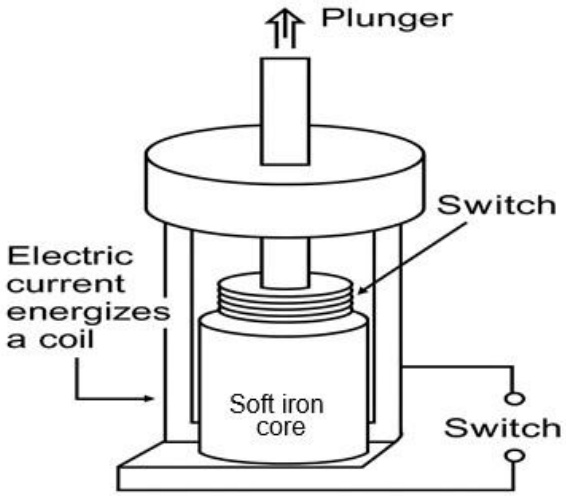 A. Why is an iron core kept inside the solenoid in this locking mechanism? B. How can we determine the magnetic poles in this solenoid?	4

**There is no change in the Question Paper Design and Assessment Pattern for Academic Session 2026-27.*

	Attempt either subpart (C) or (D). C. If the current in the solenoid is increased from 1 A to 2 A, explain how the magnetic effect changes and its effect on unlocking the door. **OR** D. If the source of the current is fixed, how can we increase the magnetic field in the solenoid? - - - - - - - - - - - - - - *For visually impaired students* A student places a small magnetic compass on a wooden table and aligns it so that the compass needle points naturally toward North–South. She then stretches a straight charging cable above the compass so that the wire is parallel to the compass needle. When the phone charger is switched on and current begins to flow through the wire, the compass needle deflects away from its North–South position. A. What causes the compass needle to deflect when current flows through the wire? B. What happens to the compass needle when the current in the wire is switched off? C. Explain how the amount of current in the wire affects the magnitude of deflection of the compass needle? **OR** D. When the direction of current is reversed, the compass deflects in the opposite direction. Explain how the Right-Hand Thumb Rule accounts for this change.	
39	*Attempt either option A or B.* A. I. What is meant by accommodation of the human eye? II. What is the near point of a normal eye and what does it signify? III. Name which type of lens is used to correct the defect in which a person cannot see distant objects clearly. IV. Draw a diagram to show how the choice of your lens in (d) helps to see distant objects clearly? **OR** B. I. What is dispersion of light? II. Which colour of light deviates the least during dispersion through a prism? III. State why the sky appears dark to an astronaut in outer space. IV. Draw a simple labelled diagram to show how white light splits into different colours while passing through a glass prism.	5

**There is no change in the Question Paper Design and Assessment Pattern for Academic Session 2026-27.*

	- - - - - - - - - - - - - - *For visually impaired students* A. I. What is meant by hypermetropia (long-sightedness)? II. What is the far point of a normal human eye and what does it signify? III. Name the type of lens used to correct hypermetropia. IV. Explain why a hypermetropic eye is unable to focus nearby objects on the retina. **OR** B. I. Why does Earth's atmosphere exhibit Tyndall's effect? II. Which colour of light has the shortest wavelength? III. Why do danger/stop signs use red colour? IV. State why the sky appears blue even though sunlight is white.	

****

*There is no change in the Question Paper Design and Assessment Pattern for Academic Session 2026-27.

SCIENCE – Code no. 086
MARKING SCHEME
CLASS – X (2026-27)

Section – A		
1	A. Carbon dioxide gains hydrogen, while water loses electrons.	1
2	C. R *For visually impaired students* B. The leaf kept in darkness will show the presence of starch	1
3	A. Glucose and salts	1
4	C. They will not produce any seeds or fruits.	1
5	C. The successful meeting and fusion of the male and female gametes	1
6	B. 17, 34	1
7	C. Secondary Consumer	1
8	D. A is false but R is true.	1
9	D. A is false but R is true	1
10	The Bile juice from the liver makes the food alkaline for the pancreatic enzymes to act. In addition, bile salts break down fats into smaller globules increasing the efficiency of enzyme action. If bile duct is obstructed, it can lead to improper digestion of fats. (0.5+0.5) Herbivores eating grass need a longer small intestine to allow the cellulose to be digested. Meat is easier to digest, hence carnivores like tigers have a shorter small intestine. (1)	2
11	The actions on which we do not have any thinking control are controlled by the mid-brain and hind-brain. These are called involuntary actions. Examples (any two) blood pressure, salivation and vomiting **OR** The information of touch is communicated by electrical-chemical means from cell to cell. Plant cells change shape by changing the amount of water in them, resulting in swelling or shrinking, thus changing shapes and causing movement.	2
12	• Uterine lining thickens and is richly supplied with blood vessels to nourish the embryo. • Placental connection is developed between the uterus and embryo.	2

13	• When a nerve impulse reaches the muscle, the muscle cells will move by changing their shape so that they shorten. • Muscle cells have special proteins that change both their shape and their arrangement in the cell in response to nervous electrical impulses. • When this happens, new arrangements of these proteins give the muscle cells a shorter form.	3
14	A. 10000 KJ B. No, the loss of energy at each step is so much that very little usable energy will be left. C. Large fish, due to biological magnification of pesticide.	3
15	A. In experiment one, in F1 all plants (100%) will have violet (Vv) flowers and in F2, 75% (3/4) plants will have violet flowers (1/4 VV and 2/4Vv) because violet colour of the flower is a dominant trait in pea plant. (1) B. 3/16 or 18.75% pea plants will have tall height and white flowers (vvTT/vvTt)– a combination of a dominant and a recessive trait. (1) *Attempt sub - part C or D.* C. In pea plants, no half way characteristics are produced because even a single copy of T or V will produce the same result as two copies of T or V. Thus, no plants with medium height and light violet flowers will be produced in F1 or F2 generation (zero percent). (2) **OR** D. In F1 generation all plants will have only dominant traits so no plant with short height and white flowers (recessive traits) will be produced (zero percent). In F2 generation 1/16 or 6.25 % plants will have short height with white flowers (vvtt) as both these traits are recessive. (2)	4
16	*Student to attempt either option A or B.* A. I. C – Four chambered heart. (1) The separation of the right side and the left side of the heart is useful to keep oxygenated and deoxygenated blood from mixing. Such separation allows a highly efficient supply of oxygen to the body. This is useful in animals that have high energy needs, such as birds and mammals, which constantly use energy to maintain their body temperature. (2) II. A – Two chambered heart. (1) The blood is pumped to the gills, is oxygenated there, and passes directly to the rest of the body. Thus, blood goes only once through the heart in the fish during one cycle of passage through the body. (1) **OR**	5

	B. I. A depicts inhalation. (1) · Ribs get lifted (0.5) · Diaphragm is flattened, (0.5) · The chest cavity becomes larger (0.5) · Air is sucked in. (0.5) II. In human beings, the respiratory pigment haemoglobin has a very high affinity for oxygen. This pigment is present in the red blood corpuscles. This oxygen-rich blood is then pumped by the heart to the rest of the body. (2) <u>*For visually impaired students*</u> I. Four chambers are present. (1) The separation of the right side and the left side of the heart is useful to keep oxygenated and deoxygenated blood from mixing. Such separation allows a highly efficient supply of oxygen to the body. This is useful in animals that have high energy needs, such as birds and mammals, which constantly use energy to maintain their body temperature. (2) II. Two chambered heart. (1) The blood is pumped to the gills, is oxygenated there, and passes directly to the rest of the body. Thus, blood goes only once through the heart in the fish during one cycle of passage through the body.(1) **OR** I. · Ribs get lifted (0.5) · Diaphragm is flattened, (0.5) · The chest cavity becomes larger (0.5) · Air is sucked in. (0.5) The exchange of gases can take place on the surface, which is provided by the alveoli. The walls of the alveoli are supplied with an extensive network of blood vessels. - So lungs maximize the area for a gaseous exchange through the presence of large numbers of alveoli which are richly supplied with blood. (1) II. In human beings, the respiratory pigment haemoglobin has a very high affinity for oxygen. This pigment is present in the red blood corpuscles. This oxygen-rich blood is then pumped by the heart to the rest of the body. (2)	
Section – B		
17	C. physical change because the space between crystals is adjusted. No new substance is formed in this process, only the spacing between crystals changes that alters the wavelength of light reflected.	1

18	B. I and III II & IV are incorrect as Chlorine is produced at the anode, but it is not used to make margarine. And sodium hydroxide is deposited near cathode.	1
19	A. Ca^{2+} and Mg^{2+} ions react with soap, forming insoluble compounds, whereas detergents do not form such insoluble salts.	1
20	D. (i), (ii) and (iv) Plaster of Paris is $CaSO_4.1/2\ H_2O$, Washing soda $Na_2CO_3.10\ H_2O$ Baking soda $NaHCO_3$ and Gypsum is $CaSO_4.2H_2O$	1
21	A. The compounds in this pair have same molecular formula but different structural formula. *For visually impaired students* A. Propene	1
22	C. nitrogen, In the label E304 and E307b are antioxidants. Nitrogen is also used as an antioxidant. *For visually impaired students* C. antioxidant	1
23	C. do not corrode easily as aluminium oxide forms a protective layer.	1
24	B. Both A and R are true, and R is not the correct explanation of A.	1
25	Carbon forms millions of compounds because it has small atomic size, therefore, it forms strong and stable C–C bonds, showing extensive catenation. Silicon, being larger in size, forms weaker Si–Si bonds and cannot show catenation to the same extent, so it forms fewer compounds.	2
26	*Attempt either option A or B.* A. (i) 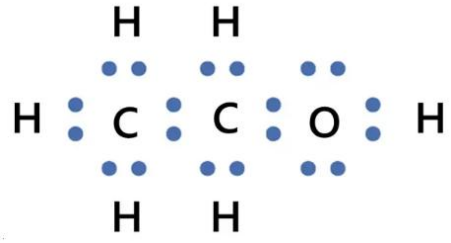 (1)	3

	(ii) Propanol, C_3H_7OH (0.5+0.5) (iii) $C_2H_5OH + CH_3COOH \xrightarrow{\text{conc. } H_2SO_4} CH_3COOC_2H_5 + H_2O$ (1) **OR** B. (i) Product A – Ethene, Product B – Ethane (0.5+0.5) (ii) $CH_3CH_2OH \xrightarrow{\text{conc. } H_2SO_4} CH_2=CH_2 + H_2O$ (1) $CH_2=CH_2 + H_2 \xrightarrow{Ni} CH_3CH_3$ (1) *For visually impaired students* A. (i) Ethanol (1) (ii) C_3H_7OH (1) (iii) $C_2H_5OH + CH_3COOH \xrightarrow{\text{conc. } H_2SO_4} CH_3COOC_2H_5 + H_2O$ (1) **OR** B. (i) Product A – Ethene, Product B – Ethane (0.5+0.5) (ii) $CH_3CH_2OH \xrightarrow{\text{conc. } H_2SO_4} CH_2=CH_2 + H_2O$ (1) $CH_2=CH_2 + H_2 \xrightarrow{Ni} CH_3CH_3$ (1)	
27	A. A sports drink contains ions (electrolytes) which help conduct electricity. Coconut oil does not contain ions so it cannot conduct electricity. (1) B. Limewater turns milky due to the formation of insoluble calcium carbonate ($CaCO_3$). When excess CO_2 is passed, calcium carbonate reacts further to form soluble calcium hydrogen carbonate, causing the milkiness to disappear. (1) C. Air near the sea contains high moisture (humidity), which speeds up rusting. In a dry hilly region, moisture is low, so rusting occurs much slowly. (1)	3
28	A. Silver (1) B. (ii) 20 s (1) *Attempt either sub-part C or D.* C. Yes, the time required for candles to drop will increase for all the metals. The order of falling of candles will remain the same. Particles vibrate and transfer heat to one another in conduction. Conduction of heat will take more time from one end to the other because heat has to travel through a longer distance. (2) **OR** D. No, if the thickness of rods is changed the inference will not be correct. The dimensions of the rods have to be the same. A thicker rod will take more time to conduct heat. (2)	4

	For visually impaired students A. Metal B (1) B. (ii) 20 s (1) *Attempt either sub-part C or D.* C. Yes, the time required for sensor to beep will increase for all the metals. The order of falling of pins will remain the same. Particles vibrate and transfer heat to one another in conduction. Conduction of heat will take more time to travel from one end to the other, as longer distance has to be covered by heat energy. (2) **OR** D. No, if the thickness of rods is changed the inference will not be correct. The dimensions of the rods have to be the same. A thicker rod will take more time to conduct heat. (2)	
29	*Student to attempt either option A or B.* A. I. Drishti.(Alisha and Bhushan are partially correct) (1) Oxidation and reduction go hand in hand. In case of formation of ammonia, nitrogen is getting reduced and hydrogen is oxidised. In case of rusting of iron, iron is getting oxidised while oxygen gets reduced. (2) II. (i) $MgCl_2 + 2AgNO_3 \rightarrow 2AgCl + Mg(NO_3)_2$ (1) (ii) $2Al + 3H_2SO_4 \rightarrow Al_2(SO_4)_3 + 3H_2$ (1) **OR** B. I. Both have understood decomposition partially. Decomposition reaction is when a single substance breaks down into simpler substances. The single substance undergoing decomposition has to be a compound while the products formed can be either elements or compounds. $MgCO_3$ decomposes on heating to magnesium oxide and carbon dioxide even when both products formed are compounds, it is decomposition. (2) Water on electrolysis gives hydrogen and oxygen both are elements. It is also a decomposition reaction. (1) II. (i) Incorrect observation, iron is less reactive than Mg so it cannot displace magnesium. (1) (ii) Hydrogen gas is formed, which produces few bubbles. Brisk effervescence is formed when carbon dioxide is formed. (1)	5

Section – C		
30	B. Hold the lens above a sheet of paper and adjust until the smallest, brightest spot is formed.	1
31	C. 4.0 A	1
32	A. Both A and R are true, and R is the correct explanation of A.	1
33	A. The ratio of sine of angle of incidence to the sine of angle of refraction is a constant, for the light of a given colour and for the given pair of media. (1) B. Consider a ray of light travelling from medium 1 into medium 2.Let v_1 be the speed of light in medium 1 and v_2 be the speed of light in medium 2. The refractive index of medium 2 with respect to medium 1 is given by (n_{21}) $n_{21} = \frac{v_1}{v_2}$ (1)	2
34	*Student to attempt either A or B.* A. I. Joule's law of heating: The heat produced in a resistor is (i) directly proportional to the square of current for a given resistance, (ii) directly proportional to resistance for a given current, and (iii) directly proportional to the time for which the current flows through the resistor. $H = I^2Rt$, where 'I' is current and 'R' is resistance. (1) II. If resistance is doubled: For the same current I, heat H becomes $H = I^2(2R)t = 2I^2Rt = 2H$, i.e. heat doubles. (1) **OR** B. I. Definition: The resistivity (ρ) of a material is defined as the resistance of a wire having unit cross-sectional area and unit length $R = \frac{\rho L}{A}$,where R is resistance of a wire of length L and cross-sectional area A (1) II. Intrinsic property justification: Resistivity depends only on material (not on dimensions). Example: Two copper wires of different lengths and thick-nesses yield the same ρ when computed using R*A/L. (1)	2

35	A. Object distance u = 24 cm (in front of lens). Type of lens: Concave (diverging) lens (given). (1) B. Image distance, v: Magnification $m = \frac{h_i}{h_o} = \frac{v}{u}$. For a concave lens the image is upright and diminished, so, $m = +\frac{1}{3}$. Using sign convention $m = -24\ cm$, $v = mu = \frac{1}{3} \times (-24) = -8\ cm.$ (1) Thus, the image is located 8 cm on the same side of the lens as the object (virtual image). C. Focal length f : Use lens formula $$\frac{1}{f} = \frac{1}{v} + \frac{1}{u}$$ Substitute, $v = -8\ cm,\ u = -24\ cm$: $$\frac{1}{f} = \frac{1}{-8} + \frac{1}{-24} = -\frac{1}{8} + \frac{1}{24} = -\frac{3+1}{24} = -\frac{2}{24} = -\frac{1}{12}$$ So, $f = -12\ cm$ (1) - - - - - - - - - - - - *For visually impaired students* If a student places an object 24 cm from a convex lens of focal length 12 cm, then $$\frac{1}{v} = \frac{1}{f} - \frac{1}{u}$$ $$\frac{1}{12} = \frac{1}{v} - \frac{1}{-24}$$ $= \frac{1}{12} - \frac{1}{24} = \frac{2-1}{24} = \frac{1}{24} = v = 24\ cm,$ (2) And, the image is real (on the opposite side) at 24 cm. (1)	3
36	A. Right-hand thumb rule: Imagine that you are holding a current-carrying straight conductor in your right hand such that the thumb points towards the direction of current. Then your fingers will wrap around the conductor in the direction of the field lines of the magnetic field. (1) If the thumb of the right hand points in the direction of conventional current, the curled fingers indicate the direction of the magnetic field lines around the conductor. This helps determine the direction of the magnetic field. (1) B. Variation with distance: Magnetic field magnitude around a long straight conductor at distance r falls as $$B \propto \frac{I}{r},$$ i.e. it decreases inversely with distance from the conductor. (1)	3

37	A. 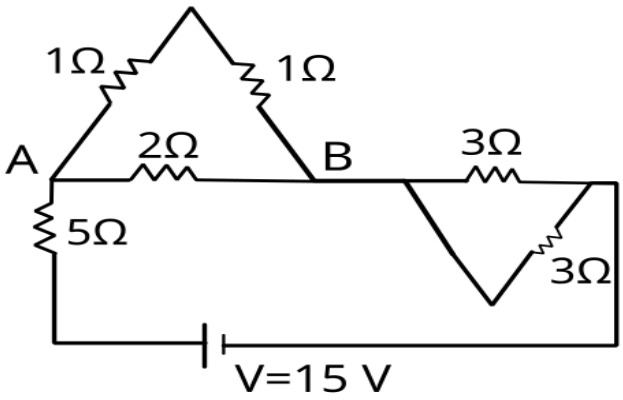 1Ω and 1Ω are in series and the combination is in parallel with 2 Ω 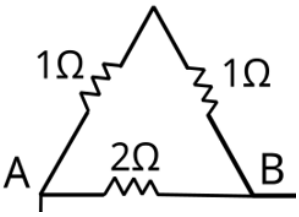 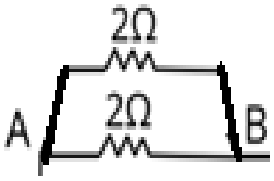 $\frac{1}{R} = \frac{1}{2} + \frac{1}{2}$ R_{AB} =1 Ω 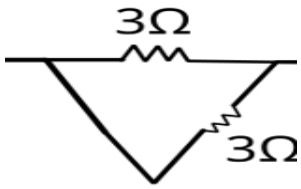 $\frac{1}{R} = \frac{1}{3} + \frac{1}{3}$ R = 1.5 Ω 5 Ω , 1 Ω and 1.5 Ω are in series: R_s = 5 + 1+1.5 R_s = 7.5 Ω V = I R 15 V = I* 7.5 I = 2A (2) B. R_{AB}= 1 Ω, net current between points A and B is 2A $V_{AB} = I_{AB} * R_{AB}$ V_{AB} = 2 *1 = 2V (1) - - - - - - - - - - - -	3

	For visually impaired students A. Total Resistance: $R_{\text{total}} = 2 + 3 + 5 = 10\ \Omega$ (1) B. Total current: $I = \frac{V}{R_{\text{total}}} = \frac{15}{10} = 1.5\ A.$ (1) C. Voltage drop across the 3 Ω resistor: $V_{3\ \Omega} = I \times 3 = 1.5\ \times 3 = 4.5\ V$ (1)	
38	A. An iron core placed inside the solenoid concentrates and amplifies the magnetic field, producing a stronger pulling force on the bolt. (1) B. Using the right-hand thumb rule (Curl the fingers of your right hand in the direction of current, then the direction of thumb will point towards the direction of north pole of the solenoid) Use a bar magnet with a known north pole towards one of the ends of the solenoid, Repulsion will indicate North pole. (1) *Attempt either sub-part C or D.* C. If current increases then the magnetic field B inside a solenoid will also increases as magnetic field is directly proportional to current. As the magnetic field increases, a stronger magnetic pull unlocks the door more effectively. (2) **OR** D. Increase the number of turns N of the coil, reduce coil length, or insert a soft iron core. (any two points) (2) *For visually impaired students* A. The compass needle is influenced by the magnetic field developed by the current carrying conductor. Hence it shows a deflection. (1) B. It aligns itself with the Earth's magnetic field in the north–south direction. (1) *Attempt either sub-part C or D.* C. The deflection increases with the increase in the amount of current as Magnetic Field in a current carrying conductor is directly proportional to the current flowing through the conductor. (2) **OR** D. The Right-Hand Thumb Rule explains the reversed compass deflection. When current direction reverses, the magnetic field's direction reverses (fingers curl the opposite way), causing the compass needle (a tiny magnet) to align with the new field, thus deflecting oppositely, showing that the magnetic field is now in the opposite direction. (2)	4

39	*Students to attempt either option A or B.* A. I. Accommodation: Ability of the eye lens to change its focal length to focus objects at different distances on the retina. (1) II. Near point: The nearest point (about 25 cm for a normal eye) at which an object can be seen distinctly; it signifies the closest comfortable focus. (1) III. Lens for defect (cannot see distant objects): A diverging (concave) lens is used to correct myopia (short-sightedness). (1) IV. Diagram: 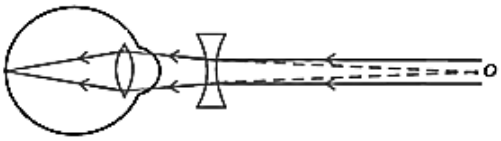 (2) B. I. Dispersion: Splitting of white light into its component colours due to wavelength-dependent refraction. (1) II. Colour deviating least in prism: Red deviates least (longest wavelength). (1) III. Sky dark in space: No atmosphere to scatter sunlight — space appears dark. (1) IV. Diagram: 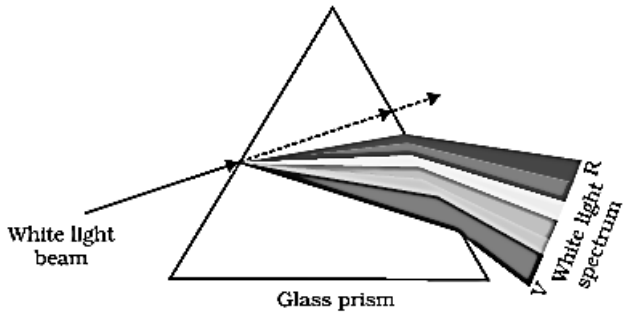 (2) - - - - - - - - - - - - *Students to attempt either option A or B.* *For visually impaired students* A. I. Hypermetropia is a defect of vision in which a person can see distant objects clearly but cannot see nearby objects clearly. (1) II. The far point of a normal human eye is at infinity. It signifies that a normal eye can see objects clearly even when they are extremely far away. (1) III. A convex (converging) lens is used to correct hypermetropia. (1) IV. A hypermetropic eye cannot focus nearby objects on the retina	5

because:

a) The eyeball is too short, or

b) The eye lens is not converging enough (insufficient curvature) As a result, the image of a nearby object forms behind the retina, instead of on it. A convex lens is used to increase the convergence of light so that the image forms on the retina. (2)

OR

B.

I. The earth's atmosphere is a heterogeneous mixture of minute particles. These particles include smoke, tiny water droplets, suspended particles of dust and molecules of air. When a beam of light strikes such fine particles, the path of the beam becomes visible. The phenomenon of scattering of light by the colloidal particles gives rise to Tyndall effect. (2)

II. Violet light has the shortest wavelength. (1)

III. Red light is least scattered by air because it has the longest wavelength. It remains visible over long distances even in fog, smoke, or dust. Hence, red is chosen for alert and stop signals. (1)

IV. Sunlight is white but when it enters the atmosphere, the smaller particles of air scatter shorter wavelengths (blue and violet) more strongly than others. Our eyes are more sensitive to blue than violet, so the sky appears blue. (1)

****

SCIENCE – Code no. 086
SAMPLE QUESTION PAPER*
CLASS – X (2025-26)

Max. Marks: 80 **Time Allowed: 3 hours**

General Instructions:

(i) This question paper consists of 39 questions in 3 sections. Section A is Biology, Section B is Chemistry and Section C is Physics.

(ii) All questions are compulsory. However, an internal choice is provided in some questions. A student is expected to attempt only one of these questions.

	Section – A	**Marks**
1	Select the group in which all organisms have the same mode of nutrition. A. Cuscuta, yeast, legumes, leeches and tapeworm B. Cactus, ticks, lice, leeches and cow C. Cuscuta, ticks, lice, leeches and tapeworm D. Cactus, grass, lice, lion and tapeworm	1
2	Which of the following options indicates the products formed after breakdown of the glucose in our muscle cells when there is lack of oxygen? A. Ethanol + carbon dioxide + Energy B. Lactic acid + Energy C. Lactic acid + carbon monoxide + Energy D. Carbon dioxide + Water + Energy	1
3	Which of the following is a correct combination of function and part of the brain? A. Posture and balance: Cerebrum B. Salivation: Medulla in midbrain C. Hunger: Pons in hindbrain D. Blood pressure: Medulla in hindbrain	1
4	The blood glucose level in a patient was very high. It may be due to inadequate secretion of: A. growth hormone from pituitary gland B. oestrogen from ovary C. insulin from pituitary gland D. insulin from pancreas	1
5	In a cross between black furred rabbit (B) and white furred rabbit (b), all offspring were found to have black fur. What can be inferred about the genetic makeup of the parent rabbits? A. BB X bb B. Bb X Bb C. Bb X bb D. bb X bb	1

**Please note that the assessment scheme of the Academic Session 2024-25 will continue in the current session i.e. 2025-26.*

6	Which are the correct statements related to ozone? (i) Ozone layer helps in increasing the UV radiations reaching earth. (ii) Ozone is a deadly poison. (iii) Ozone layer shields the earth from UV radiations. (iv) Ozone layer prevents UV rays which cause skin cancer. (v) Ozone is formed with the help of Chloroflurocarbons. A. (i), (ii), (iii) B. (ii), (iii), (iv) C. (iii), (iv), (v) D. (i), (iv), (v)	1
7	Which of the following human activities has resulted in an increase of non-biodegradable substances? A. Organic farming B. Increase in tree plantation C. Use of plastic as packaging material D. Composting of kitchen waste	1
The following two questions consist of two statements – **Assertion** (A) and **Reason** (R). Answer these questions by selecting the appropriate option given below: A. Both A and R are true, and R is the correct explanation of A. B. Both A and R are true, and R is not the correct explanation of A. C. A is true but R is false. D. A is false but R is true.		
8	**Assertion (A):** Tallness of a pea plant is controlled by an enzyme**.** **Reason (R):** The gene for that enzyme makes proteins which help the plant to be tall.	1
9	**Assertion (A):** Vulture will always have the least amount of pesticides in a food chain. **Reason (R)**: Vulture occupies the last trophic level and it gets only 10% of energy of the previous trophic level.	1
10	Unlike animals, plants do not have any excretory products as they do not eat food. Comment upon the statement with justification.	2
11	*Students to attempt either option A or B.* A. How many chambers are there in the heart of the following organisms? How is mixing of oxygenated and deoxygenated blood prevented in their body? (i) Fishes (ii) Humans **OR** B. Explain the mechanism by which the water is transported in plants?	2
12	About 100 acres of forest land was declared as Natural reserve park. The following organisms were predominant in the Natural reserve park:	2

**Please note that the assessment scheme of the Academic Session 2024-25 will continue in the current session i.e. 2025-26.*

	rabbit, frog, grass, fish, fox, water insects, zebra, peacock, snake, trees, bird, owl, insects, tiger, vulture, duck. Create a food web comprising two separate food chains with different producers by using the above data.	
13	Draw and explain how the nerve cells help in transmission of impulses?	3
14	In a genetic experiment, plants with pure round green seeds (RRyy) were crossed with plants with wrinkled yellow seeds (rrYY). (i) Show the gametes formed when F1 was self-pollinated. (ii) A total of 144 seeds were produced which developed into saplings. Show the ratio in which these traits are independently inherited in these144 sapling.	3
15	Neha consumed boiled sweet potatoes and boiled eggs for breakfast. Help her to understand some steps in the process of digestion of the food taken by her by answering the questions given below. *Attempt either subpart A or B.* A. Which of these food items is rich in proteins? In which part of the alimentary canal is the digestion of this component initiated? Name the enzymes, conditions required and the glands associated with the digestion here. **OR** B. Which of these food items contains fats? How is it digested? C. Which of these food items is rich in starch? How is its digestion initiated? D. The figure given below represents parts of the human alimentary canal. Which of these parts will have the maximum amount of digested food as soon as the process of digestion is completed? 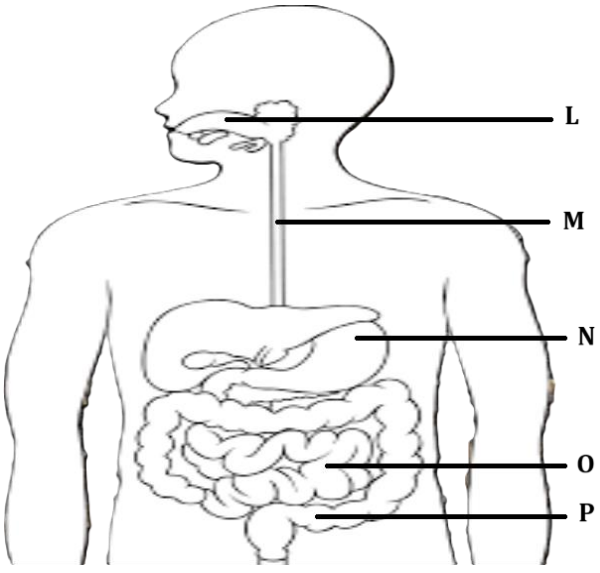 **Figure: Human Alimentary canal**	4

**Please note that the assessment scheme of the Academic Session 2024-25 will continue in the current session i.e. 2025-26.*

	For visually impaired students D. How will the digested food be taken up by the alimentary canal?	
16	*Attempt either option A or B.* A. Puneet wanted to grow banana plants. (i) Based on your knowledge on plant reproduction should he opt for seeds or any alternate method of reproduction. Justify your answer. (ii) Offsprings of a banana plant usually show very little variation. What causes variation and are variations good or bad? Justify. **OR** B. Annie was conducting research on the number of fruits produced by watermelon under different conditions. She grew 25 watermelon plants each in both glass house A and B. She introduced pollinators in glass house A only. (i) What difference will she observe in the number of fruits produced in the two glass houses? Explain with reason. (ii) List 3 changes that will occur in a flower once it gets fertilized.	5
	Section – B	
17	Which of the following equations represent redox reactions and what are the values for 'p' and 'q' in these equations? Equation 1: $Fe_2O_3(s) + 2Al(s) \longrightarrow Al_2O_3(s) + p\ Fe(l) + heat$ Equation 2: $2C_4H_{10}(g) + 13O_2(g) \xrightarrow{\triangle} 8CO_2(g) + q\ H_2O(g)$ A. Only equation 1 is a redox reaction, p =1 and q=3 B. Both equations 1 and 2 are redox reactions, p= 2 and q=4 C. Only equation 2 is a redox reaction, p= 2 and q= 10 D. Both equations 1 and 2 are redox reactions, p= 2 and q=10	1
18	Four statements about the reactions of oxides with dilute hydrochloric acid and aqueous sodium hydroxide are listed. I. Aluminium oxide reacts with both dilute hydrochloric acid and aqueous sodium hydroxide. II. Calcium oxide reacts with dilute hydrochloric acid and aqueous sodium hydroxide. III. Zinc oxide reacts with both dilute hydrochloric acid and aqueous sodium hydroxide. IV. Sulphur dioxide does not react with either dilute hydrochloric acid or aqueous sodium hydroxide. Which statements are correct? A. I and II B. I and III C. II and IV D. III and IV	1

**Please note that the assessment scheme of the Academic Session 2024-25 will continue in the current session i.e. 2025-26.*

19	An iron nail is added to each of the two test tubes 'P' and 'Q' containing aqueous copper (II) sulphate, and aqueous silver nitrate respectively. Which of the following observation is correct? A. In test tube 'P' iron nail is coated with a blue coating and in test tube 'Q' there is no reaction. B. Iron nail is coated with a brown coating in test tube 'P' and silver coating in test tube 'Q'. C. There is no reaction in either of the test tubes 'P' or 'Q'. D. There is no reaction in test tube 'P' but a silver coating on iron nail is seen in test tube 'Q'.	1
20	Methyl orange is added to dilute hydrochloric acid and to aqueous sodium hydroxide. What is the colour of the methyl orange in each solution? <table><tr><th>Sample</th><th>colour in dilute hydrochloric acid</th><th>colour in aqueous sodium hydroxide</th></tr><tr><td>A</td><td>Orange</td><td>Red</td></tr><tr><td>B</td><td>Red</td><td>Yellow</td></tr><tr><td>C</td><td>Red</td><td>Orange</td></tr><tr><td>D</td><td>Yellow</td><td>Red</td></tr></table>	1
21	Which of the following substances when dissolved in equal volume of water, will have the highest pH value? A. Sulphuric acid B. Acetic acid C. Magnesium hydroxide D. Sodium hydroxide	1
22	When excess of carbon dioxide is passed through lime water, the milkiness disappears because A. water soluble calcium carbonate converts to water soluble calcium bicarbonate. B. insoluble calcium carbonate converts to water soluble calcium bicarbonate. C. water soluble calcium carbonate converts to insoluble calcium bicarbonate. D. insoluble calcium carbonate converts to insoluble calcium bicarbonate.	1
23	In the reaction of aqueous solution of barium chloride with aqueous solution of sodium sulphate, the aqueous solution formed will be: A. $BaCl_2$ B. $BaSO_4$ C. Na_2SO_4 D. NaCl	1

The following question consists of two statements – **Assertion** (A) and **Reason** (R). Answer these questions by selecting the appropriate option given below:

A. Both A and R are true, and R is the correct explanation of A.
B. Both A and R are true, and R is not the correct explanation of A.

**Please note that the assessment scheme of the Academic Session 2024-25 will continue in the current session i.e. 2025-26.*

	C. A is true but R is false. D. A is false but R is true.	
24	**Assertion (A):** C_4H_8, C_4H_6 and C_4H_{10} are members of the same homologous series **Reason (R):** C_4H_8, C_4H_6, C_3H_4, C_3H_6, C_2H_4, C_2H_2 are unsaturated hydrocarbons.	1
25	The following activity is set-up in the science lab by the teacher. He clamped an aluminium wire on a stand and fixed a pin to the free end of the wire using wax. Then he heated the wire with a burner from the end where the wire is clamped. Students observed the pin fall off. 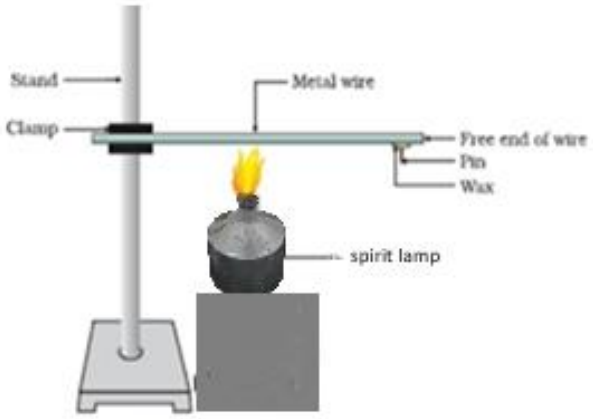 A. If the teacher replaces aluminium wire by silver wire, will the students' observation change? Justify your answer. B. Will the aluminium wire melt? Give reason for your answer.	2
26	*Attempt either option A or B.* A. An element 'X' is stored in kerosene, and cannot be extracted from its ore using a reducing agent. 'X' forms an ionic compound on reaction with chlorine. (i) Can we store 'X' in water? Give reason to support your answer. (ii) Identify element 'X'. Name the process used and write the equation for extraction of 'X' from its ore. **OR** B. The domes of many building in Europe are made of copper. These domes now appear greenish in colour. (i) Why do the domes appear greenish though copper is orange-red in colour? (ii) In your opinion, should the copper domes be replaced by iron domes to overcome the problem of change of colour of copper domes? (iii) Domes used to be made from thin sheets of metals. Why did the ancient architects use copper to make domes?	3
27	Amrita electrolysed distilled water using the set-up shown in figure 1. She was expecting two gases to be evolved at the anode and cathode respectively	3

**Please note that the assessment scheme of the Academic Session 2024-25 will continue in the current session i.e. 2025-26.*

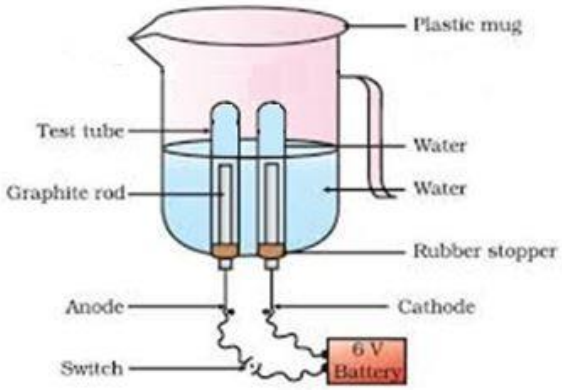

Fig.1

Suddenly, she realised that the bulb in the circuit did not glow when she used distilled water (figure 2)

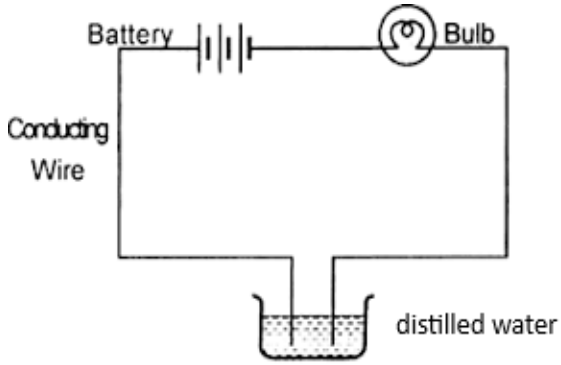

Fig. 2

After this realization, she added a substance to the distilled water for electrolysis to take place.

Answer the following questions based on the information given above:

A. Which gas was she expecting to be formed at the anode and which one at the cathode respectively?
B. Why did the bulb not glow when Amrita passed electricity through distilled water?
C. Which substance was added by Amrita to distilled water to get the expected result?

- - - - - - - - - - - - - - - - - - -

For visually impaired students

Identify the type of reaction:

A. $ZnO + C \longrightarrow Zn + CO$
B. $ZnCO_3 \xrightarrow{heat} ZnO + CO_2$
C. $2Mg + O_2 \longrightarrow 2\ MgO + heat$

28	Sara took 2 mL of dilute NaOH solution in a test tube and added two drops of phenolphthalein solution to it. The solution turned pink in colour. She added dilute H_2SO_4 to the above solution drop by drop until the solution in the test tube became colourless. 40 drops of dilute H_2SO_4 were used for the change in	4

colour from pink to colourless. When Sara added a drop of NaOH to the solution, the colour changed to back to pink again.
Sara now tried the activity with different volumes of NaOH and recorded her observation in the table given below:

S. No.	Volume of dil. NaOH taken (mL)	Drops of dil. H_2SO_4 used
1	2	20
2	3	30
3	4	40

Answer the following questions based on the above information:

A. If Sara used concentrated H_2SO_4 in place of dilute H_2SO_4, how many drops will be required for the change in colour to be observed?
(a) 40
(b) < 40
(c) >40

Justify your answer.

B. Sara measured 20 drops of dil. H_2SO_4 and found its volume to be 1 mL. If Sara observed a change in colour of NaoH solution by using 3 mL of H_2SO_4, how many mL of NaOH did she add to the test tube initially?

OR

Sara takes 10 drops of dilute H_2SO_4 in the test tube and adds two drops of phenolphthalein solution to it. Then she adds NaOH dropwise. Sara observes a change in colour after adding 20 drops of NaOH. What change in colour would she observe and why?

C. Write a balanced chemical equation for the reaction taking place in the above experiment. Which of the following is true and why? The reaction is a
(a) neutralisation and double displacement reaction
(b) neutralisation and precipitation reaction
(c) precipitation and double displacement reaction
(d) neutralisation, double displacement as well as precipitation reaction.

29 *Attempt either option A or B.* 5

A. A hydrocarbon with the formula C_xH_y undergoes complete combustion as shown in the following equation:

$$2C_xH_y + 9O_2 \rightarrow 6CO_2 + 6H_2O.$$

(a) What are the values of 'x' and 'y'?
(b) Give the chemical (IUPAC) name of the hydrocarbon.
(c) Draw its electron dot structure.
(d) Name the alcohol which on heating with conc. H_2SO_4 will produce the above hydrocarbon C_xH_y.

**Please note that the assessment scheme of the Academic Session 2024-25 will continue in the current session i.e. 2025-26.*

(e) Write a balanced chemical equation for the reaction of C_xH_y with hydrogen gas in presence of Nickel.

OR

B. The electronic structures of atoms P and Q are shown below

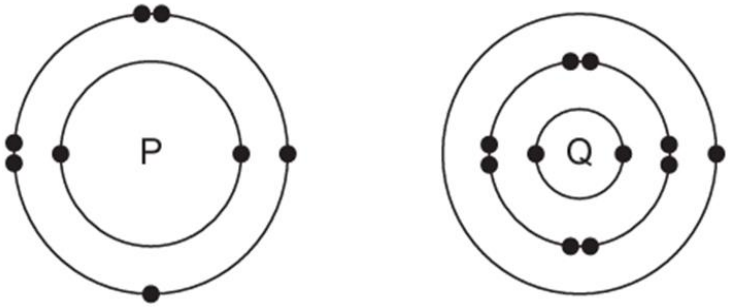

Based on the information given above, answer the following questions:

(a) If P and Q combine to form a compound, what type of bond is formed between them?
(b) Give the chemical formula of the compound formed.
(c) The compound so formed is dissolved in water. Is the resultant solution acidic or basic in nature? Justify your answer.
(d) Write the chemical equation for the reaction between 'Q' and ethanol.
(e) What will be the formula of the compound formed when 'P' undergoes bonding with carbon?

- - - - - - - - - - - - - - - - - - -

For visually impaired students

A. A hydrocarbon with the formula C_xH_y undergoes complete combustion as shown in the following equation:

$2C_xH_y + 9O_2 \rightarrow 6CO_2 + 6H_2O$.

(a) What are the values of 'x' and 'y'?
(b) Give the chemical (IUPAC) name of the hydrocarbon.
(c) Is C_xH_y a saturated or an unsaturated hydrocarbon?
(d) Name the alcohol which on heating with conc. H_2SO_4 will produce the above hydrocarbon C_xH_y.
(e) Write a balanced chemical equation for the reaction of C_xH_y with hydrogen gas in presence of Nickel.

OR

B. Oxygen can combine with both metals and non-metals. It combines with Calcium to form CaO and with carbon to form CO_2.

(a) What type of bond is formed between carbon and oxygen?
(b) Identify the type of bond formed between Calcium and oxygen.
(c) Which of the above compounds will be a good conductor of electricity in molten state and why?
(d) Comment on the physical state (solid, liquid or gas) of CaO and CO_2.
(e) What is the valency of carbon in CO_2?

**Please note that the assessment scheme of the Academic Session 2024-25 will continue in the current session i.e. 2025-26.*

Section – C		
30	Arnav was making notes and he wrote down the following statements from his understanding of reflection from curved surfaces. I. Concave mirrors can produce both real and virtual images depending on the position of the object. II. Convex mirrors always produce real, inverted images regardless of the object's position. III. In both concave and convex mirrors, the image location can be determined using the mirror formula $\frac{1}{f} = \frac{1}{v} + \frac{1}{u}$ where f is the focal length, v is the image distance, and u is the object distance. Choose from the following the correct option that lists the correct statements about reflection from curved surfaces. A. I and II B. I, II and III C. II and III D. I and III	1
31	Choose the correct option from the below which explains the reason for us to perceive the day sky as blue. A. As sunlight passes through the atmosphere, shorter wavelengths, such as blue are scattered more than other colors. B. The sky appears blue because all colors are scattered equally, but blue light is stronger and more visible to the human eye. C. The blue color of the sky is due to longer wavelengths like red and orange scattering more than shorter wavelengths, making blue stand out more. D. The atmosphere contains blue-colored particles that give the sky its blue appearance.	1
The following question consists of two statements – **Assertion** (A) and **Reason** (R). Answer these questions by selecting the appropriate option given below: A. Both A and R are true, and R is the correct explanation of A. B. Both A and R are true, and R is not the correct explanation of A. C. A is true but R is false. D. A is false but R is true.		
32	**Assertion (A):** A point object is placed at a distance of 26 cm from a convex mirror of focal length 26 cm. The image will not form at infinity. **Reason (R):** For above given system the equation $\frac{1}{f} = \frac{1}{v} + \frac{1}{u}$ gives v = ∞.	1

**Please note that the assessment scheme of the Academic Session 2024-25 will continue in the current session i.e. 2025-26.*

33	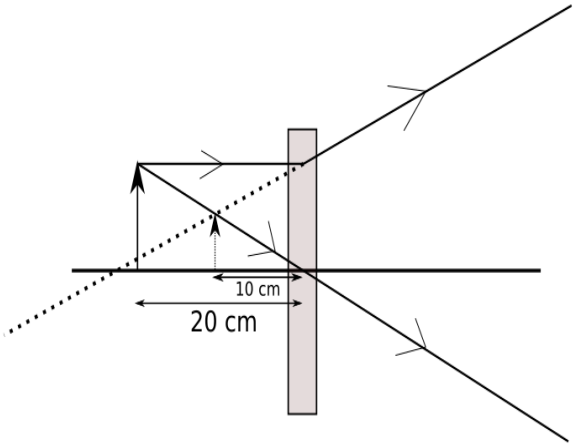 The above image shows the formation of an image with an optical instrument. A. Identify the optical instrument (shown schematically as a rectangle) in the image. B. What type of image is formed in this case? C. Based on the measurements given in the image, calculate the focal length of the instrument. - - - - - - - - - - - - - - *For visually impaired students* A. Under what conditions can a convex lens form a virtual image? B. Why does a piece of paper catch fire if we allow sunlight to pass through a convex lens onto the paper?	2
34	*Attempt either option A or B.* A. 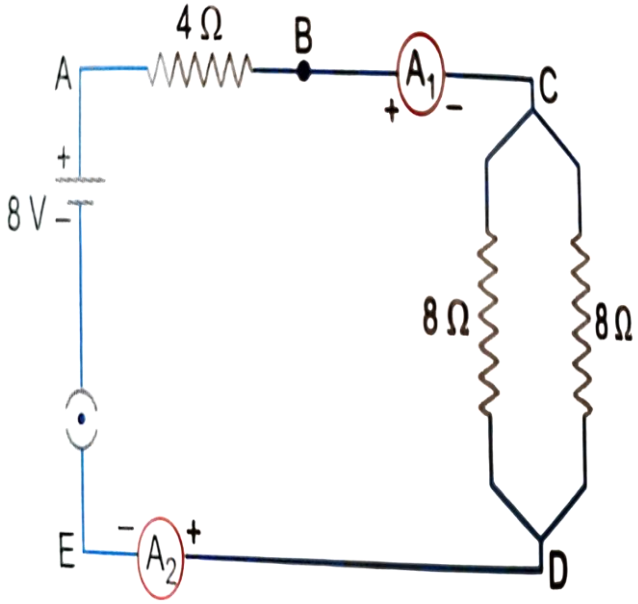 Find out the following in the electric circuit given in the figure- (i) Effective resistance of two 8 ohm resistors in the combination. (ii) Current flowing through the 4-ohm resistor **OR**	2

**Please note that the assessment scheme of the Academic Session 2024-25 will continue in the current session i.e. 2025-26.*

	B. 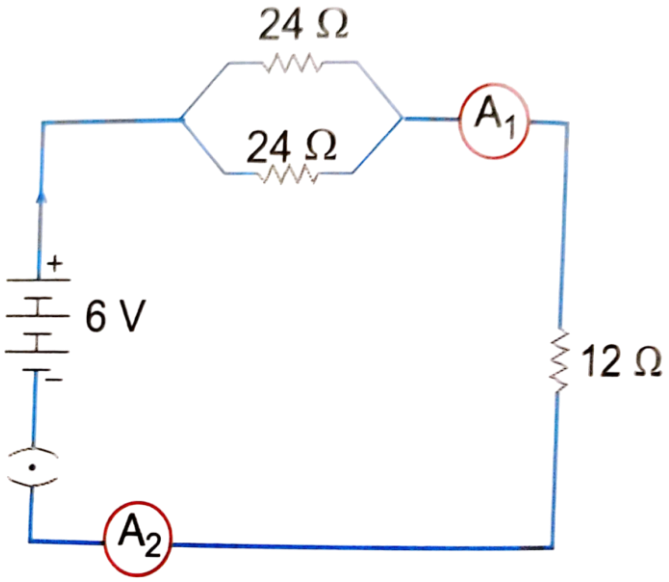 Study the circuit and find out- (i) Current in 12 ohm resistor (ii) Difference in the readings of ammeter A_1 and A_2 if any - - - - - - - - - - - - - - *For visually impaired students* A. You are given four resistors each having resistance of R ohm. Find the maximum and minimum resistance that can be made with these four resistors. **OR** B. A copper wire has a length L=2 m, a cross-sectional area A=0.5 mm^2, and resistivity $\rho=1.7\times10^{-8}$ Ω-m. Calculate the resistance of another wire made of the same material whose length is twice the length of the wire but has the same cross-sectional area.	
35	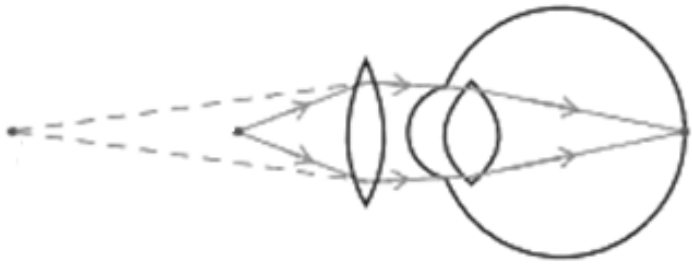 The above image shows a corrective measure for a particular defect of vision. (i) Identify the defect of vision and state what kind of lens is used to correct this deficiency. (ii) Draw and label a ray diagram that shows the defect of vision in the above case before correction. - - - - - - - - - - - - - - *For visually impaired students* (i) What is dispersion of light?	3

**Please note that the assessment scheme of the Academic Session 2024-25 will continue in the current session i.e. 2025-26.*

	(ii) Explain the condition under which dispersion happens? (iii) Give one reason that causes presbyopia.	
36	A student needs to make a 0.12 Ω resistor. She has some copper wire of 0.80 mm diameter. Resistivity of copper is 1.8×10^{-8} Ωm (i) Determine the cross-sectional area of the wire. (ii) Calculate the length of wire required for the 0.12 Ω resistor.	3
37	Magnetic field lines are shown in the given diagram. A student makes a statement that the magnetic field at X is stronger than at Y. (i) Explain with reason if the student's claim is correct. (ii) Also redraw the diagram and mark the direction of magnetic field lines. 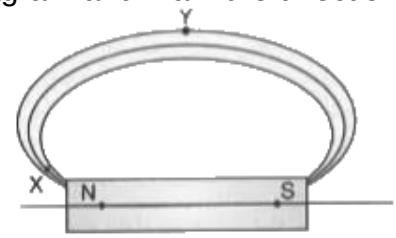	3
38	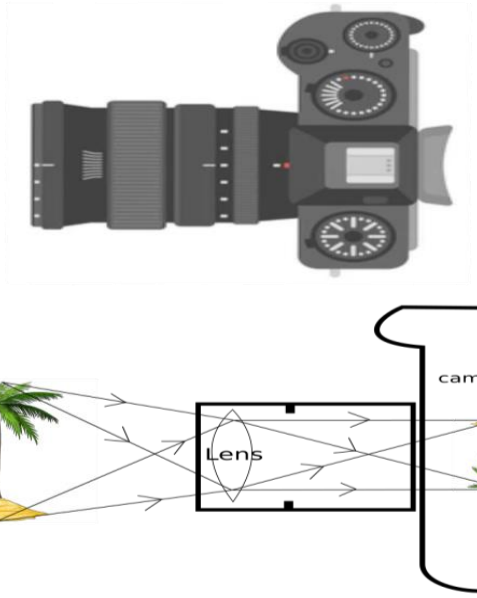 The above image is that of a Digital Single Lense Reflector (DSLR) Camera which are used to take high resolution photographs by professional photographers. The second image of the above two is a schematic diagram of how an image is formed on the sensor of the camera. Based on your understanding of the lenses, answer the following questions. A. What type of lens is used in the DSLR camera shown in the image? B. What type of image is formed on the sensor? *Attempt either subpart C or D.* C. A photographer is using a DSLR camera with a lens of focal length f=50 mm to take a close-up photograph of a small object. The lens projects an image onto the camera sensor that is located 60 mm behind the lens. Calculate the object distance (i.e., the distance between the object and the lens).	4

**Please note that the assessment scheme of the Academic Session 2024-25 will continue in the current session i.e. 2025-26.*

	OR D. A photographer is using a DSLR camera to take a picture of a flower. The flower is positioned 150 mm away from the camera lens. The actual height of the flower is 80 mm, and the image height formed on the camera's sensor is measured to be 20 mm. Calculate the focal length of the camera lens. *For visually impaired students* Zarina worked as an apprentice in a factory where flashlights and solar cookers are made. She learnt to make the circuits, the design of the light-box and light concentrators of the solar cookers as well. She learnt the uses of lenses in making all those tools. Based on your understanding of lenses, answer the following questions. A. What kind of lenses are used in the flashlight and light concentrator of the solar-cooker? B. Give reasons for your choices in your answer for part A. *Attempt either subpart C or D.* C. An object is placed 40 cm away from a lens which is normally used in a solar-cooker. The image formed is twice the size of the object. Calculate the focal length of the lens. **OR** D. An object is placed 20 cm in front of a lens which is used in a flashlight, and the image is formed 10 cm away from the lens on the same side as the object. Calculate the focal length of the lens.	
39	*Attempt either option A or B.* A. 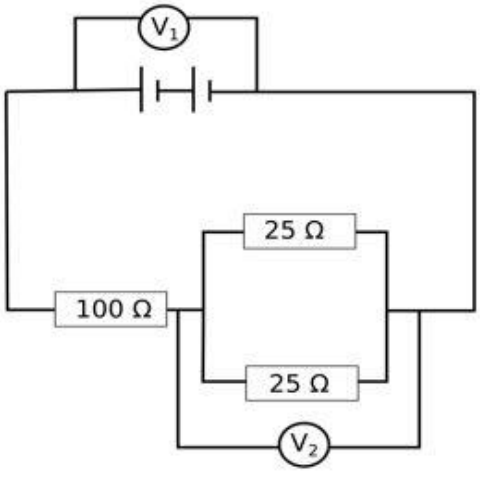 The arrangement of resistors shown in the above figure is connected to a battery.; The power dissipation in the 100 Ω resistor is 81 W. Calculate (i) the current in the circuit (ii) the reading in the voltmeter V_2 (iii) the reading in the voltmeter V_1	5

**Please note that the assessment scheme of the Academic Session 2024-25 will continue in the current session i.e. 2025-26.*

OR

B.

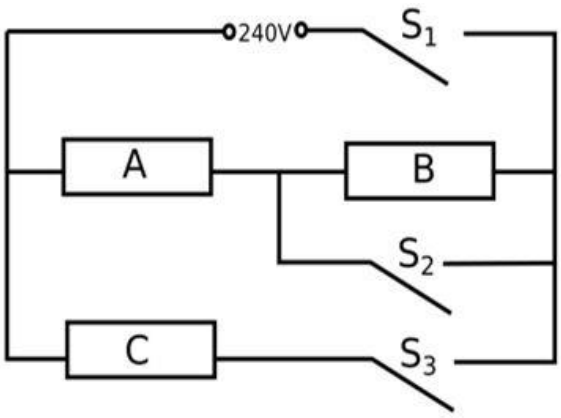

An electric heater consists of three similar heating elements A, B and C, connected as shown in the figure above. Each heating element is rated as 1.2 kW, 240 V and has constant resistance. S_1, S_2 and S_3 are respective switches.

The circuit is connected to a 240 V supply.

(i) Calculate the resistance of one heating element.

(ii) Calculate the current in each resistor when only S_1 and S_3 are closed.

(iii) Calculate the power dissipated across A when S_1, S_2 and S_3 are closed.

- - - - - - - - - - - - - -

For visually impaired students

A.

(i) Explain why in household circuits only the fuse is connected in series with all the rest of the appliances but all appliances are connected in parallel to each other.

(ii) In a household circuit, an electric heater of power 1500 W and a fan of power 500 W are connected in parallel to a 220 V supply. A fuse rated for 10 A is connected to the circuit to protect it from excessive current.

(a) Calculate the total current drawn by the heater and the fan.

(b) Determine whether the 10 A fuse is appropriate for this circuit or if it will blow.

OR

B. Two resistors, R_1=6 Ω and R_2=12 Ω, are connected in parallel to a 24V battery. The circuit operates for 5 minutes.

(i) Calculate the total heat generated in both resistors.

(ii) If each resistor has a power rating of 100 W, determine whether it is safe to use these resistors in the circuit.

****

**Please note that the assessment scheme of the Academic Session 2024-25 will continue in the current session i.e. 2025-26.*

SCIENCE – Code no. 086
MARKING SCHEME
CLASS – X (2025-26)

Section – A		
1	C. Cuscuta, ticks, lice, leeches and tapeworm; as all of these are parasites.	1
2	B. Lactic acid + Energy	1
3	D. Blood pressure: Medulla in hindbrain	1
4	D. insulin from pancreas	1
5	A. BB x bb	1
6	B. (ii), (iii), (iv)	1
7	C. Use of plastic as packaging material.	1
8	A. Both A and R are true, and R is the correct explanation of A.	1
9	D. A is false but R is true	1
10	It is completely wrong to say that plants do not produce any excretory products. However, plants use completely different strategies for excretion than those of the animals. They get rid of these wastes in different manner (any two): i. Oxygen, a photosynthetic waste, is removed through stomata. ii. Excess water is removed by transpiration through stomata. iii. Other metabolic wastes are either stored in dead cells, resins and gums or are removed through falling of old leaves. iv. Many waste products are stored in cellular vacuoles	2
11	*Students to attempt either option A or B.* A. (i) There are two chambers in the heart of fish. The blood is pumped to the gills, is oxygenated there and passes directly to the rest of the body. (ii) There are four chambers in the heart of a human being. Separation of the right side and the left side of the heart by septum prevents mixing of oxygenated and de-oxygenated bloods **OR** B. Xylem moves water and minerals obtained from the soil through roots to all other parts of the plant in a unidirectional manner// Transpiration takes place from leaf which causes a transpirational pull in the tracheids and vessels of xylem facilitating upward movement of water// roots	2

	actively uptake ions from the soil, leading to difference in concentration gradient, thereby water moves into the roots to eliminate this difference/ creating a steady movement of water into root xylem.	
12	Tree food chain- tree, zebra, tiger /Any other food chain Grassland food chain- grass, zebra, tiger / Any other food chain Food web- Join the two food chains at a common point (zebra)	2
13	• All information from our environment is detected by the specialised tips of some nerve cells. The information acquired at the end of the dendritic tip of a nerve cell (Fig. a), sets off a chemical reaction that creates an electrical impulse. • This impulse travels from the dendrite to the cell body, and then along the axon to its end. At the end of the axon, the electrical impulse sets off the release of some chemicals. • These chemicals cross the gap, or synapse, and start a similar electrical impulse in a dendrite of the next neuron. This is how nervous impulses travel in the body. (Fig b). 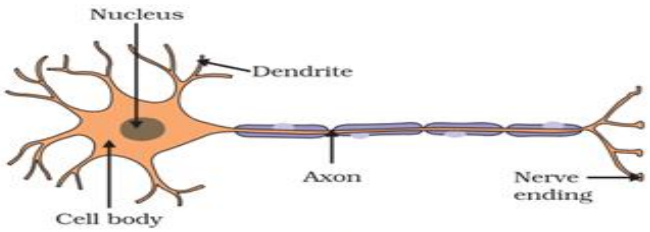 (a) 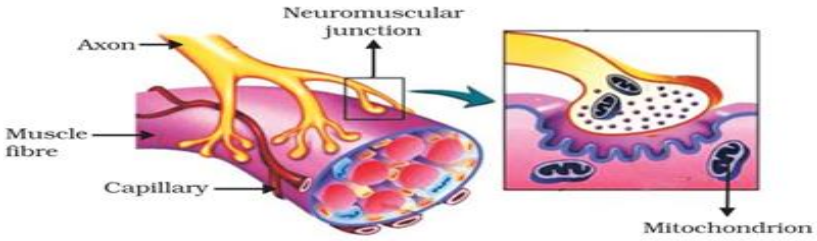 (b) **Figure** (a) Structure of neuron, (b) Neuromuscular junction	3
14	A. RY, Ry, rY, ry B. The traits which are independently inherited are as follows Tall round: 81 Tall wrinkled: 27 Short round: 27 Short wrinkled: 9 (Ratio :- 9 : 3 : 3 : 1)	3
15	*Students to attempt either subpart A or B.* A. Eggs are rich in proteins. The digestion of proteins is initiated in the stomach. Gastric glands present in the wall of the stomach release	4

	hydrochloric acid, a protein digesting enzyme called pepsin and mucus. The hydrochloric acid creates an acidic medium which facilitates the action of enzyme pepsin. **OR** B. Eggs contain fats. Bile juice from the liver breaks down large fat globules into smaller ones for increasing the efficiency of the enzymes and making the medium alkaline. Emulsified fats are digested by lipase secreted by pancreas. C. Sweet potatoes are rich in starch. The saliva secreted by salivary glands present in buccal cavity contain an enzyme called salivary amylase that breaks down starch which is a complex molecule to give sugar. D. Small Intestine will have a maximum amount of digested food as the process of digestion is completed in the small intestine. *For Visually impaired students* D. The digested food is taken up by the inner lining of the intestine with the help of finger-like projections or villi which increase the surface area for the absorption.	
16	*Student to attempt either option A or B.* (i) Puneet should not choose seeds as banana plants have lost the capacity to produce seeds. He should go for vegetative propagation of banana (by stem cutting). (ii) Errors and variations in DNA copying cause variation. Variation is good as it can help a population tide over unfavourable conditions by survival of some variants. It is bad as parents' desirable characters are lost/ sometimes variants are not able to survive in the new conditions/ the variant is not able to use the cellular apparatus efficiently. ***OR*** (i) Watermelon has unisexual flowers, the male and female flowers are separate. The presence of pollinators will facilitate cross pollination between the flowers increasing the chance of fertilization and number of fruits being produced. Without pollinators the probability of pollen falling on stigma reduces in a unisexual flower, especially if they are far apart thus the number of fruits produced will be less. (ii) The three changes observed are: • Ovule develops a tough coat and becomes seed. • Ovary grows and ripens to form fruit. • Petals, sepals, stamen, style and stigma may shrivel and fall off.	5
Section – B		
17	D. Both equations 1 and 2 are redox reactions, p= 2 and q=10	1
18	B. (I) and (III)	1

<table>
<tr><td>19</td><td>B. Iron nail is coated with a brown coating in test tube ‘P’ and silver coating in test tube ‘Q’.</td><td>1</td></tr>
<tr><td>20</td><td><table><tr><td>B.</td><td>Red</td><td>Yellow</td></tr></table></td><td>1</td></tr>
<tr><td>21</td><td>D. Sodium hydroxide</td><td>1</td></tr>
<tr><td>22</td><td>B. insoluble calcium carbonate converts to water soluble calcium bicarbonate.</td><td>1</td></tr>
<tr><td>23</td><td>D. NaCl</td><td>1</td></tr>
<tr><td>24</td><td>D. A is false but R is true</td><td>1</td></tr>
<tr><td>25</td><td>A. The pin will drop but will take less time to drop because silver is a better conductor of heat than aluminium.
B. No, aluminium wire will not melt because metals have high melting points.</td><td>2</td></tr>
<tr><td>26</td><td><u>Attempt either option A or B.</u>
A.
(i) No, ‘X’ is highly reactive and will catch fire.
(ii) Sodium.
It is extracted from molten sodium chloride by electrolytic reduction
Cathode: $Na^+ + e^- \rightarrow Na$
Anode: $2Cl^- \rightarrow Cl_2 + 2e^-$
(Potassium is also a correct option)
OR
B.
(i) Copper gets oxidised/corroded to basic copper carbonate which is greenish in colour.
(ii) No, iron will rust and the reddish layer of rust will come off exposing iron to air, the dome will not be stable. Copper on the other hand on corrosion forms a protective layer which does not allow further corrosion.
(iii) Copper is a highly malleable metal, its thin sheets can be used to give different shapes of roofs, like the shape of a dome.</td><td>3</td></tr>
<tr><td>27</td><td>A. She was expecting Oxygen gas to be formed at the anode and hydrogen at the cathode.
B. Distilled water is a poor conductor of electricity.
C. Adding few drops of H_2SO_4 or some NaCl (or any other strong electrolyte).
<u>For visually impaired students</u>
A. Redox reaction</td><td>3</td></tr>
</table>

	B. Decomposition reaction and endothermic reaction C. Combination reaction and exothermic reaction	
28	A. (b) < 40, because concentrated H_2SO_4 gives more H+ ions than dilute acid. B. 3 mL of H_2SO_4 will be 60 drops, which will neutralise 6 mL of NaOH <table><tr><th>S. No.</th><th>Volume of dil NaOH taken (mL)</th><th>Drops of dil H_2SO_4 used</th></tr><tr><td>1</td><td>2</td><td>20 (1 mL)</td></tr><tr><td>2</td><td>3</td><td>30 (1.5 mL)</td></tr><tr><td>3</td><td>4</td><td>40 (2 mL)</td></tr><tr><td>4</td><td>6</td><td>3 mL = 60 drops</td></tr></table>**OR** Colour will change from colourless to pink. Phenolphthalein in colourless in acids and turns pink in basic solution. C. $2NaOH + H_2SO_4 \rightarrow Na_2SO_4 + 2H_2O$ (a) neutralisation and double displacement reaction. Base NaOH is getting neutralised and forming salt + water. It is double displacement as Na^+ ions are being replaced by H^+ and OH^- by SO_4^{2-}. It is not precipitation reaction because Na_2SO_4 is soluble in water.	4
29	*Student to attempt either option A or B.* A. (a) x = 3, y = 6 (b) Propene (c) 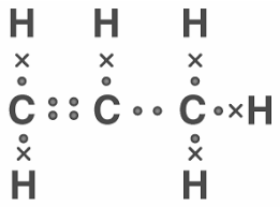 (d) Propanol (e) $C_3H_6 + H_2 \xrightarrow{Ni} C_3H_8$ $CH_2=CH-CH_3 + H_2 \xrightarrow{Ni} CH_3-CH_2-CH_3$ **OR** B. (a) Ionic bond (b) Q_2P (c) Basic, metallic oxides are basic in nature. (d) $2C_2H_5OH + 2Q \rightarrow 2C_2H_5OQ + H_2$ (e) CP_2 *For visually impaired students* A. (a) x = 3, y = 6	5

	(b) Propene (c) Unsaturated hydrocarbon (d) Propanol (e) $C_3H_6 + H_2 \xrightarrow{Ni} C_3H_8$ **OR** B. (a) Covalent bond (b) Ionic bond (c) CaO, due to presence of free ions in molten state. (d) CaO is solid while CO_2 is a gas. (e) 4	
Section – C		
30	D. I and III	1
31	A. As sunlight passes through the atmosphere, ***Rayleigh scattering causes*** shorter wavelengths, such as blue and violet, to scatter more than other colors, but our eyes are more sensitive to blue than violet.	1
32	C. A is true but R is false	1
33	A. The optical instrument shown in the figure is a concave lens. B. The image formed is a virtual image. C. To find the focal length for of a concave lens, we can use the lens formula: $\frac{1}{f} = \frac{1}{v} - \frac{1}{u}$ where: • $u =$ - 20 cm (object distance, taken as negative for concave lenses), • $v =$ - 10 cm (image distance, also taken as negative since the image formed by a concave lens is virtual). Solution: 1. Substitute the values into the lens formula: $\frac{1}{f} = \frac{1}{-10} - \frac{1}{-20}$ 2. Simplify the terms: $\frac{1}{f} = \frac{1}{-10} - \frac{1}{-20}$ 3. Find a common denominator: $\frac{1}{f} = -\frac{2}{20} + \frac{1}{20} = -\frac{1}{20}$ 4. Solve for f: $f =$ - 20 cm	2

	- - - - - - - - - - - - *For visually impaired students* A. A convex lens can form a virtual image when the object is placed between the lens and its focal point. B. A convex lens can focus parallel rays of sunlight to a single point, known as the **focal point**. Sunlight contains energy, and when this light is concentrated at a small point, the energy density increases significantly. This focused light energy raises the temperature at the focal point, which can become high enough to ignite a piece of paper placed at that point.	
34	*Student to attempt either A or B.* A. (i) $R = \frac{R_1 R_2}{R_1 + R_2} = \frac{8 \times 8}{8 + 8} = 4\ ohms$ (ii) $I = \frac{V}{R} = \frac{8}{(4+4)} = 1\ A$ **OR** B. (i) $\frac{1}{R_P} = \frac{1}{R_1} + \frac{1}{R_2} = \frac{1}{24} + \frac{1}{24} = \frac{2}{24}$ R_p = 12 ohms $R_T = R_p + 12$ = 24 ohms $I = \frac{V}{R} = \frac{6}{24} = 0.25\ A$ (ii) Same readings of A_1 and A_2 - - - - - - - - - - - - *For visually impaired students* A. (i) Maximum Resistance: • To get the maximum resistance, connect all four resistors in series. • The total resistance R_{max} in series is the sum of the individual resistance: $R_{\max} = R + R + R + R = 4R$ (ii) Minimum Resistance: • To get the minimum resistance, connect all four resistors in parallel.	2

	• The total resistance R_{min} in parallel is given by: $$\frac{1}{R_{min}} = \frac{1}{R} + \frac{1}{R} + \frac{1}{R} + \frac{1}{R} = \frac{4}{R}$$ $$R_{min} = \frac{R}{4}$$ **OR** B. $$R = \frac{\rho \cdot l}{A}$$ Given: • Initial length, $l = 2\,\text{m}$ • Cross-sectional area, $A = 0.5\,\text{mm}^2 = 0.5 \times 10^{-6}\,\text{m}^2$ • Resistivity of copper, $\rho = 1.7 \times 10^{-8}\,\Omega \cdot \text{m}$ Step 1: Calculate the initial resistance R_1 and l = 2 m $$R_1 = \frac{\rho \cdot l}{A} = \frac{1.7 \times 10^{-8}\,\Omega \cdot \text{m} \times 2\,\text{m}}{0.5 \times 10^{-6}\,\text{m}^2}$$ $$R_1 = \frac{3.4 \times 10^{-8}}{0.5 \times 10^{-6}}\,\Omega = 0.068\,\Omega$$ Step 2: Calculate the new resistance R_2 and l = 4 m (double length) $$R_2 = \frac{\rho \cdot (2l)}{A} = 2 \times R_1 = 2 \times 0.068\,\Omega = 0.136\,\Omega$$ The resistance of the wire when the length is double is 0.136 Ω	
35	(i) Hypermetropia is the deficiency in vision and the lens is convex lens. (ii) 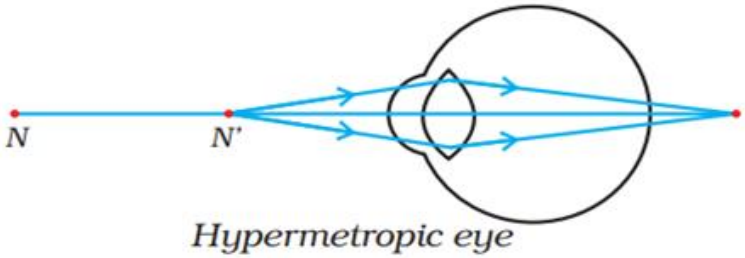 *Hypermetropic eye* - - - - - - - - - - - - *<u>For visually impaired students</u>* (i) Dispersion of light is the phenomenon in which white light separates into its component colors (spectrum) when it passes through a medium, such as a prism. Different colours of light lend through different angles with respect to incident light, thus becoming district.	3

	(ii) Dispersion occurs when light passes from one medium to another where the speed of light is different for each wavelength. For example, in a prism, each color of light has a different refractive index due to varying wavelengths, causing each color to bend at different angles as they exit the prism. Dispersion only happens if the medium has a variable refractive index across different wavelengths, like glass or water. (iii) Presbyopia is caused by the gradual loss of flexibility in the lens of the eye, which occurs with aging. This reduced flexibility prevents the lens from changing shape effectively to focus on close objects, making it difficult to see them clearly.	
36	(i) Show that the cross-sectional area of the wire is about 5 x 10^{-7} m^2. The cross-sectional are *A* of a wire with diameter *d* is given by: $$A = \pi \left(\frac{d}{2}\right)^2$$ Substitute, d = 0.80 x 10^{-3} m: $$A = \pi \left(\frac{0.80 \times 10^{-3}}{2}\right)^2$$ $$A = \pi \left(0.40 \times 10^{-3}\right)^2$$ $$A = \pi \times (0.16 \times 10^{-6})\,\mathrm{m}^2$$ $$A \approx 3.14 \times 0.16 \times 10^{-6}\,\mathrm{m}^2$$ $$A \approx 5.024 \times 10^{-7}\,\mathrm{m}^2$$ Thus, the cross-sectional are *A* is approximately 5 x 10^{-7} m^2. (ii) To find the length l of the wire, we can use the formula of resistance: $$R = \frac{\rho \cdot l}{A}$$ Rearrange to solve for l : $$l = \frac{R \cdot A}{\rho}$$ Substitute the values: $$l = \frac{0.12 \cdot 5 \times 10^{-7}}{1.8 \times 10^{-8}}$$ $$l = \frac{6 \times 10^{-8}}{1.8 \times 10^{-8}}$$ $$l = \frac{6}{1.8}\,\mathrm{m}$$ $$l = 3.33\,\mathrm{m}$$ The student needs a length of approximately 3.33 m of given copper wire to make a 0.12 Ω resistor.	3

37	• Closeness of magnetic field lines is directly related to strength of magnetic field. • Strength of magnetic field at point X (pole) is more than point Y. • If the student redraws the diagram he/she should mark arrows correctly from North to South. 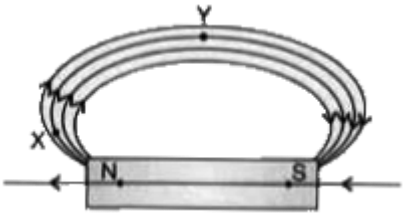 	3
38	A. Convex Lens B. Real and Inverted *Student to attempt either subpart C or D.* C. To find the object distance (u) for the lens, we can use the lens formula: $\frac{1}{f} = \frac{1}{v} - \frac{1}{u}$ where: • *f* = 50 mm (focal length), • *v* = 60 mm (image distance), • *u* is the object distance, which we need to calculate. Rearranging the formula to solve for u: $\frac{1}{u} = \frac{1}{v} - \frac{1}{f}$ Substitute the values: $\frac{1}{u} = \frac{1}{60} - \frac{1}{50}$ Calculate each term: $\frac{1}{u} = \frac{50 - 60}{3000} = \frac{-10}{3000} = -\frac{1}{300}$ Thus, the negative sign indicates that the object is located 300 mm in front of the lens (on the opposite side from the image). So, the object distance is: u = 300 mm **OR** D. image height = - 20 mm object height = 80 mm The magnification (m) of the lens is given by: $m = \frac{\text{image height}}{\text{object height}}$ Substituting the values: $m = \frac{-20mm}{80\ mm} = -\frac{1}{4}$	4

Thus, the magnification m = − 0.25 mm.

Magnification is also given by:

$$m = \frac{v}{u}$$

where:

- v is the image distance
- u = −150 mm

Rearrange to solve for v:

v = m × u = −0.25 × −150 mm = 37.5 mm

So, the image distance v = 37.5 mm.

The lens formula is:

$$\frac{1}{f} = \frac{1}{v} - \frac{1}{u}$$

Substituting the values of v and u:

$$\frac{1}{f} = \frac{1}{37.5} + \frac{1}{150}$$

Converting to a common denominator:

$$\frac{1}{f} = \frac{4+1}{150} = \frac{5}{150} = \frac{1}{30}$$

Thus, f = 30 mm

Answer: The focal length of the camera lens is 30 mm.

- - - - - - - - - - - -

For visually impaired students

A. Concave Lens for Flashlight and Convex Lens for solar cooker.
B. Concave lens diverges the light rays which is needed for a wider reach of the flashlight. Convex lens converges the rays which helps to raise the temperature of the place where rays converge.

Student to attempt either subpart C or D

C. To find the focal length (f) of the lens, we can use the information about the object distance (u) and the magnification (m).

Given:

- Object distance, u = − 40 cm
- The image is twice the size of the object, so the magnification,

$$m = -2$$

Since the magnification $m = \frac{v}{u}$, we can rearrange this to find the image distance v:

$$v = m \times u$$

	Substitute the values for m and u: $v = -2 \times -40 = 80$ cm The lens formula is : $\frac{1}{f} = \frac{1}{v} - \frac{1}{u}$ Substitute $v = 80\ cm$ and $u = -40\ cm$: $\frac{1}{f} = \frac{1}{80} - \frac{1}{-40} = \frac{1}{80} + \frac{1}{40}$ Convert to a common denominator: $\frac{1}{f} = \frac{1+2}{80} = \frac{3}{80}$ Thus, $f = \frac{80}{3} = 26.67$ cm (approximately) Answer : The focal length of the lens is approximately 26.67 cm. **OR** D. • Object distance, u = - 20 cm • Image distance v = - 10 cm (since the image is on the same side as the object) We can use the lens formula to calculate the focal length (f) : $\frac{1}{f} = \frac{1}{v} - \frac{1}{u}$ Substitute the values of v and u : $\frac{1}{f} = \frac{1}{-10} - \frac{1}{-20} = \frac{1}{-10} + \frac{1}{20}$ Finding a common denominator: $\frac{1}{f} = \frac{-2}{20} + \frac{1}{20} = -\frac{1}{20}$ Thus, $f = -20$ cm Answer: The focal length of the lens is - 20 cm, indicating it is a diverging lens (concave lens).	
39	<u>*Students to attempt either option A or B.*</u> A. (i) Power across the 100 Ω resistance = 81 W $P = I^2R = 81\ W$ $\therefore I^2 = \frac{81}{100}$ $\therefore I = \sqrt{\frac{81}{100}} = \frac{9}{10} = 0.9\ A$	5

(ii) Voltage across the 25 Ω resistors = $V_2 = IR_{eqv}$
for the 25 Ω resistors

$$\frac{1}{R_{eqv}} = \frac{1}{25} + \frac{1}{25} = \frac{2}{25}$$

$$\therefore R_{eqv} = \frac{25}{2} = 12.5\,\Omega$$

$$\therefore V_2 = 0.9\,A \times 12.5\,\Omega = 11.25\,V$$

(iii) Voltage across 100 Ω = $V_{100} = IR = 0.9\,A \times 100\,\Omega = 90\,V$

$$\therefore V_1 = 90\,V + 11.25\,V = 101.25\,V$$

OR

B.

(i) $P = \frac{V^2}{R}$

$$\therefore R = \frac{V^2}{P} = \frac{240 \times 240}{1200} = 48\,\Omega$$

(ii) For S_1 and S_3 closed

– Current in C

$V = IR\ (Ohm's\ Law)$

$$\therefore I = \frac{V}{R} = \frac{240\,V}{48\,\Omega} = 5\,A$$

– Current in A and B

$$V = IR\ (Ohm's\ Law)$$

$$\therefore I = \frac{V}{R} = \frac{240\,V}{96\,\Omega} = 2.5\,A$$

(iii) Power across A for S_1, S_2, S_3 closed

$$P_A = I^2R = 5^2 \times 48 = 1200\,W = 1.2\,KW$$

- - - - - - - - - - - -

For visually impaired students

A.

(i) In household circuits, the fuse is connected in series with all appliances to ensure that it can cut off the entire circuit in case of excessive current, preventing hazards like fires or damage. This way, any overload or short circuit causes the fuse to blow, protecting all appliances.
Appliances are connected in parallel to ensure each receives the same voltage from the mains and can operate independently. This setup allows appliances to work simultaneously and efficiently, with each drawing only the current it needs, without affecting others.

Give Data:

- Power of heater, P_{heater} = 1500 W
- Power of Fan, P_{fan} = 500 W

- Supply Voltage, V = 220 V
- Fuse rating = 10 A

Step 1: Calculate the Current Drawn by Each Appliance

Using the formula = $I = \frac{P}{V}$:

1. Current drawn by the heater:

$$I_{\text{heater}} = \frac{P_{\text{heater}}}{V} = \frac{1500\,\text{W}}{220\,\text{V}}$$

I_{heater} = 6.82 A (rounded to two decimal places)

2. Current drawn by the fan:

$$I_{fan} = \frac{P_{fan}}{V} = \frac{500\ W}{220\ V}$$

I_{fan} = 2.27 A (rounded to two decimal places)

Step 2 : Calculate the total curent in the circuit

Since the heater and fan are connected in parallel, the total curent I_{total} is the sum of the currents through each appliance:

$$I_{\text{total}} = I_{\text{heater}} + I_{\text{fan}}$$

$$I_{\text{total}} = 6.82\,\text{A} + 2.27\,\text{A}$$

$$I_{\text{total}} = 9.09\,\text{A}$$

Step 3: Compare with the Fuse Rating
The fuse is rated for 10 A, and the total current drawn by the heater and fan together is 9.09 A.

Since 9.09 A < 10 A, the fuse will not blow and is appropriate for this circuit, as the total current is within the fuse's capacity.

OR

B.

Given data:

- Resistor R_1 = 6 Ω
- Resistor R_2 = 12 Ω
- Voltage V = 24 V
- Time t = 5 Minutes = 5 x 60 = 300 seconds

Step 1: Calculate the Current through each Resistor

Since the resistors are connected in parallel, the voltage across each resistor is the same as the battery voltage, V = 24 V.

Using Ohm's Law, $I = \frac{V}{R}$:

Current through R_1

$$I_1 = \frac{V}{R_1} = \frac{24\,\text{V}}{6\,\Omega} = 4\,\text{A}$$

Current through R_2:

$$I_2 = \frac{V}{R_2} = \frac{24\,\text{V}}{12\,\Omega} = 2\,\text{A}$$

Step 2: Calculate the Heat Generated in Each Resistor

Using Joule's Law of Heating, $H = I^2Rt$:

- Heat generate in R_1:

$$H_1 = I_1^2 \times R_1 \times t = (4\,\text{A})^2 \times 6\,\Omega \times 300\,\text{s}$$

$$H_1 = 16 \times 6 \times 300 = 28800\,\text{J}$$

- Heat generate in R_2:

$$H_2 = I_2^2 \times R_2 \times t = (2\,\text{A})^2 \times 12\,\Omega \times 300\,\text{s}$$

$$H_2 = 4 \times 12 \times 300 = 14400\,\text{J}$$

- Total Heat Generated *H:*

$$H_{\text{total}} = H_1 + H_2 = 28800\,\text{J} + 14400\,\text{J} = 43200\,\text{J}$$

So, the total heat generated in both resistor is **43200 J.**

Step 3 : Determine if each Resistor is safe

The power dissipated by each resistor can be calculated using $P = V \times I$

- Power dissipated by R_1 :

$$P_1 = V \times I_1 = 24\,\text{V} \times 4\,\text{A} = 96\,\text{W}$$

- Power dissipated by R_2:

$$P_2 = V \times I_2 = 24\,\text{V} \times 2\,\text{A} = 48\,\text{W}$$

Given that the power rating of each resistor is 100 W:

- R_1 is operating at 96 W, which is within the 100 W limit. Hence, it is safe.
- R_2 is operating at 48 W, which is also within the 100 W limit. Hence, it is safe.

****

SCIENCE SQP (2024-25)
CLASS X
(Science 086)

Max. Marks: 80 **Time Allowed: 3 hours**

General Instructions:

1. All *questions would be compulsory. However, an internal choice of approximately 33% would be provided. 50% marks are to be allotted to competency-based questions.*
2. *Section A would have 16 simple/complex MCQs and 04 Assertion-Reasoning type questions carrying 1 mark each.*
3. *Section B would have 6 Short Answer (SA) type questions carrying 02 marks each.*
4. *Section C would have 7 Short Answer (SA) type questions carrying 03 marks each.*
5. *Section D would have 3 Long Answer (LA) type questions carrying 05 marks each.*
6. *Section E would have 3 source based/case based/passage based/integrated units of assessment (04 marks each) with sub-parts of the values of 1/2/3 marks.*

Section-A

Question 1 to 16 are multiple choice questions. Only one of the choices is correct. Select and write the correct choice as well as the answer to these questions.

1 Identify ‘p’, ‘q’ and ‘r’ in the following balanced reaction — 1

$$p\ Pb(NO_3)_{2(s)} \xrightarrow{Heat} q\ PbO_{(s)} + r\ NO_{2(g)} + O_{2(g)}$$

A. 2,2,4
B. 2,4,2
C. 2,4,4
D. 4,2,2

2 Match column I with column II and select the correct option using the given codes. — 1

Column I	Column II
a. A metal that forms amphoteric oxides	(i) Ga
b. A metal which melts when kept on our palm	(ii) Au
c. A metal that reacts with nitric acid	(iii) Al
d. A metal which cannot displace hydrogen from acids	(iv) Mn

A. a – (ii), b – (i), c – (iii), d – (iv)
B. a – (iii), b – (i), c – (iv), d – (ii)
C. a – (iv), b – (ii), c – (iii), d – (i)
D. a – (iii), b – (ii), c – (i), d – (iv)

3	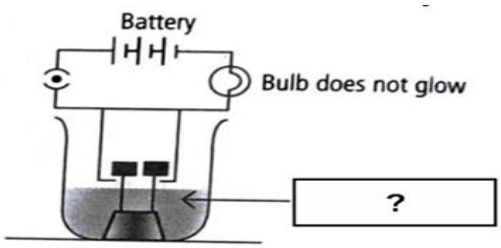 The solution in the given figure is likely to be A. HNO_3 B. C_2H_5OH C. H_2SO_4 D. CO_2 in water - - - - - - - - - - - - - - *For Visual Impaired Students* Which among the following is considered as the strongest electrolyte? A. Dilute acid B. Dilute sugar solution C. Glucose solution D. Ethanol in water	1
4	An aqueous solution 'A' turns the phenolphthalein solution pink. On addition of an aqueous solution 'B' to 'A', the pink colour disappears. Which of the following statement is true for the solutions 'A' and 'B'. A. A is strongly basic and B is a weak base. B. A is strongly acidic and B is a weak acid. C. A has a pH greater than 7 and B has a pH less than 7. D. A has a pH less than 7 and B has a pH greater than 7.	1
5	When 50g of lead powder is added to 300 ml of blue copper sulphate solution, after a few hours, the solution becomes colourless. This is an example of A. Combination reaction B. Decomposition reaction C. Displacement reaction D. Double displacement reaction	1
6	The electronic configuration of three elements X, Y and Z are X- 2, 8, 7; Y- 2, 8, 2; and Z - 2, 8 A. Y and Z are metals B. Y and X are non-metals C. X is a non -metal and Y is a metal D. Y is a non-metal and Z is a metal	1
7	Which of the following is an endothermic reaction? A. Burning of candle. B. Cooking of food. C. Decomposition of Vegetable matter. D. Reaction of Sodium with air	1

8	During cellular oxidation of Glucose, ATP is produced along with formation of other products in this reaction. Which of the following events is associated with production of maximum ATP molecules per molecule of Glucose during this process? Synthesis of A. ethanol in yeast B. lactic acid in muscle cells C. carbon dioxide in yeast cells D. carbon dioxide in human cells	1
9	During which of the following stages of the circulation of blood in a normal human being, the oxygenated blood is pumped to all parts of the body? A. contraction of the left atrium B. contraction of left ventricle C. relaxation of the right atrium D. relaxation of the right ventricle	1
10	Which of the following adaptations in herbivores helps in digestions of cellulose? A. Longer large intestine B. Smaller large intestine C. Smaller small intestine D. Longer small intestine	1
11	There was a cerebellar dysfunction in a patient. Which of the following activities will get disturbed in this patient as a result of this? A. Salivation B. Hunger control C. Posture and balance D. Regulation of blood pressure	1
12	In snails individuals can begin life as male and depending on environmental conditions they can become female as they grow. This is because A. male snails have dominant genetic makeup. B. female snails have dominant genetic makeup. C. expression of sex chromosomes can change in a snail's life time. D. sex is not genetically determined in snails.	1
13	In the following cases, a ray is incident on a concave mirror. In which case is the angle of incidence equal to zero? A. A ray parallel to the principal axis. B. A ray passing through the centre of curvature and incident obliquely. C. A ray passing through the principal focus and incident obliquely. D. A ray incident obliquely to the principal axis, at the pole of the mirror.	1

<table>
<tr><td>14</td><td>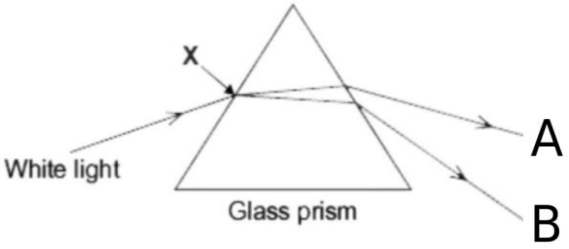

Choose the correct option for the colour of rays for A and B.
<table>
<tr><th></th><th>Colour of Ray A</th><th>Colour of Ray B</th></tr>
<tr><td>A.</td><td>Blue</td><td>Red</td></tr>
<tr><td>B.</td><td>Green</td><td>Yellow</td></tr>
<tr><td>C.</td><td>Red</td><td>Violet</td></tr>
<tr><td>D.</td><td>Violet</td><td>Indigo</td></tr>
</table></td><td>1</td></tr>
<tr><td>15</td><td>Identify the incorrect statement
‘The energy available to the producers is maximum’ because:
A. It is the first trophic level which absorbs1% of light energy directly from the source.
B. It utilizes the most of the chemical energy for its own respiration, growth, reproduction, movement etc.
C. It utilizes 10% of light energy and transfers the rest to the next trophic level.
D. It transfers only 10% of light energy to the next trophic level.</td><td>1</td></tr>
<tr><td>16</td><td>Which of the following is not a role of decomposers in the ecosystem?
A. Natural replenishment of soil.
B. Enrichment of oxygen in atmosphere.
C. Waste decomposition.
D. Break-down of dead remains.</td><td>1</td></tr>
<tr><td colspan="3">Question No. 17 to 20 consist of two statements – Assertion (A) and Reason (R). Answer these questions by selecting the appropriate option given below:
A. Both A and R are true, and R is the correct explanation of A.
B. Both A and R are true, and R is not the correct explanation of A.
C. A is true but R is false.
D. A is false but R is true</td></tr>
<tr><td>17</td><td>Assertion (A): On adding dil. HCl to a test tube containing a substance ‘X’, a colourless gas is produced which gives a pop sound when a burning match stick is brought near it.
Reason (R): In this reaction metal ‘X’ is displaced by Hydrogen.</td><td>1</td></tr>
<tr><td>18</td><td>Assertion (A): Generally, the number of chromosomes in a cell and in a germ cell is not the same in species.
Reason (R): When two germ cells combine, they restore the normal number of chromosomes in a species.</td><td>1</td></tr>
</table>

19	**Assertion (A)**: A convex mirror always forms an image behind it and the image formed is virtual. **Reason (R)**: According to the sign convention, the focal length of a convex mirror is positive.	1
20	**Assertion (A):** If the lions are removed from a food chain it will not affect the food chain, however if the plants are removed from a food chain it will disturb the ecosystem. **Reason (R)**: Plants are producers who can make food using sunlight, while lions are consumers.	1

Section-B

Question No. 21 to 26 are very short answer questions

21	Identify the type of each of the following reactions stating the reason for your answers. A. $Fe_2O_3 + 2Al \rightarrow Al_2O_3 + 2Fe + heat$ B. $Pb(NO_3)_2 + 2KI \rightarrow PbI_2(\downarrow) + 2KNO_3$	2
22	Differentiate between alveoli and nephron on the basis of the following points:	2

S. No.	Feature	Alveoli	Nephron
1	Structure and location		
2	Function		

23	*Attempt either option A or B.* A. List the steps for the synthesis of glucose by the plants. What special feature is found in desert plants related to this process? **OR** B. Explain the role of the following enzymes in the process of digestion of food in humans: (i) Salivary amylase (ii) Pepsin (iii) Trypsin (iv) Lipase	2
24	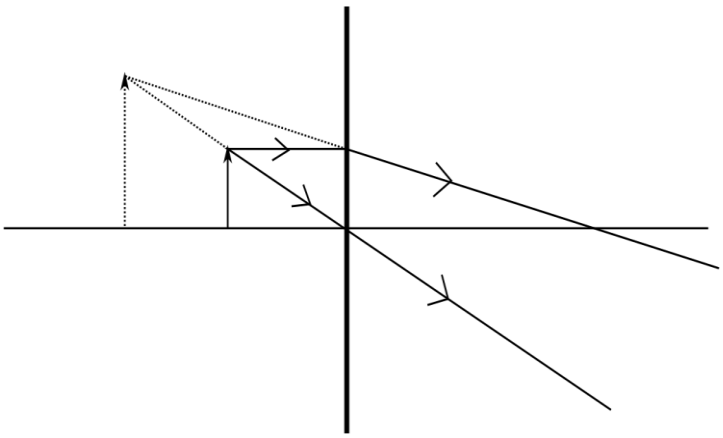 The above figure shows the formation of an image by a lens shown by a thick line.	2

	Analyse the figure and answer the following questions. A. What is the type of lens used? B. What is the nature of the image? C. If the image is formed at a distance of 30 cm from the lens and the image is twice the size of the object, then where is the object placed? - - - - - - - - - - - - - - *For visually impaired students* A. What type of lens always forms a virtual erect and diminished image? B. List two uses of such a lens.	
25	*Attempt either option A or B.* A. 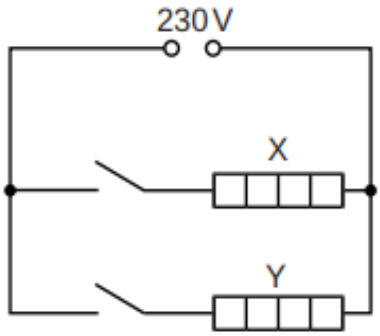 The electric circuit (above figure) in a clothes dryer contains two heaters X and Y in parallel. The above figure shows the circuit connected to a 230 V power supply. When both switches are closed, the current in X is 3.5 A. Analyse the circuit given above and answer the following questions. (i) Calculate the power developed in heater X. (ii) If the resistance of X is double that of Y calculate the current in heater Y. **OR** B. 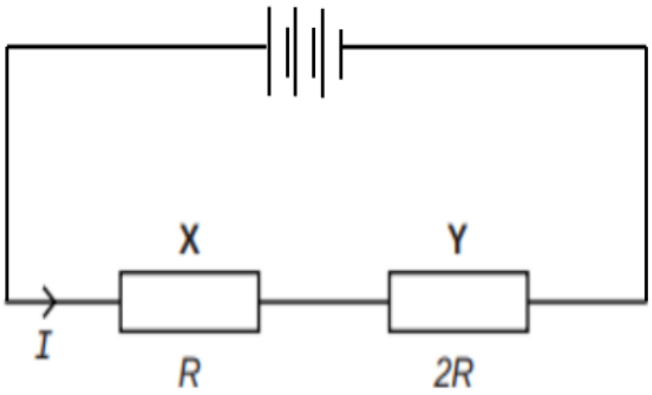 The above figure shows two resistors X and Y connected in series to a battery. The power dissipated for this combination is P_1. When these resistors	2

	are connected in parallel to the same battery then the power dissipated is given by P_2. Find out the ratio $\frac{P_1}{P_2}$. - - - - - - - - - - - - - - *For visually impaired students* A. We have four resistors A, B, C and D of resistance 3 Ω, 6 Ω ,9 Ω and 12 Ω respectively. Find out the lowest resistance which can be obtained by combining these four resistors. **OR** B. You are given 2 fuse wires A and B with current ratings 2A and 5A respectively. Justify with reason which of the two would you use with a 1000W, 220V room heater?	
26	The cartoon below addresses a growing concern: 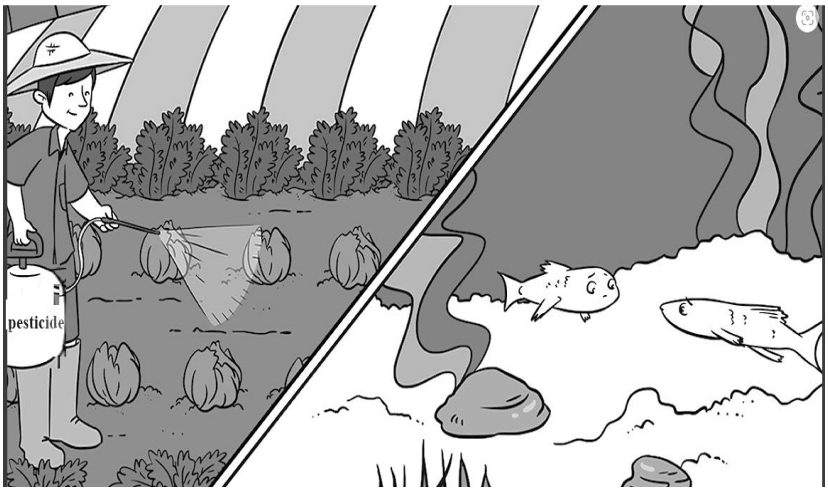 main.jpg (1148×574) (frontiersin.org) What impact will the process shown in the image have on Humans if they occupy the last trophic level? Explain. - - - - - - - - - - - - - - *For visually impaired students* Create a food chain with more than 2 trophic levels that exists in the cabbage farm. If Humans occupy the last trophic level, then how would spraying pesticide affect the humans? Explain.	2
Section-C Question No. 27 to 33 are short answer questions		
27	A. Anirudh took two metal oxides; aluminium oxide and magnesium oxide as shown in the pictures given below. But he forgot to label them. How will you guide/ help Anirudh to identify the oxides and label them?	3

	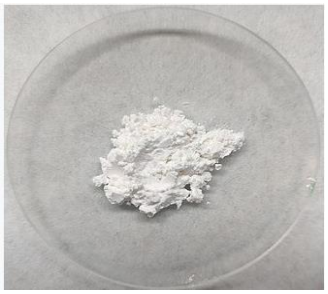  B. In an activity Aishu was given two substances; Copper Sulphide (Cu_2S) and Copper Oxide (Cu_2O) to obtain copper from these compounds. She was able to extract Copper successfully. Illustrate with the help of chemical equations how Aishu might have completed the activity. - - - - - - - - - - - - - - *For visually impaired students* Give reasons for the following i. Certain metals are used for making cooking utensils. ii. Hydrogen gas does not evolve when certain metals except Mg & Mn react with nitric acid.	
28	*Attempt either option A or B.* A. (i) In the given series of reactions, name the compounds X and Z. (ii) Which type of reaction is X to Z? 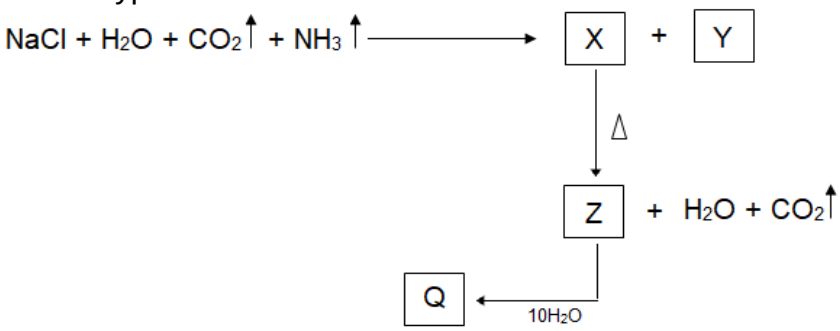 (iii) You are given 3 unknown solutions A, B, and C with pH values of 6, 8 and 9.5 respectively. In which solution will the maximum number of hydronium ions be present? Arrange the given samples in the increasing order of H^+ ion concentration. **OR** B. Comment on the following statements: (i) Bee sting is treated with baking soda paste whereas wasp sting is treated with dilute vinegar. (ii) Farmers treat soil with quicklime when tilling. (iii) Ancient sculptures and marble structures are conserved by treating them with certain chemicals."	3
29	Water is used by the leaves of the plants for photosynthesis but rather than watering the leaves, we water the plant through the soil. How does this water reach the leaves of the plant?	3

30	A. In a family of four individuals, the father possessed long ears and the mother possessed short ears. If the parents had pure dominant and recessive traits respectively and F1 individual is married to an unrelated individual of the same genotype, then calculate the ratio of genetic makeup of F2 generation. Show a suitable cross. (2) B. If father had short ears and the mother had long ears, and both the parents are homozygous for the allelic pair of genes, explain what effect it will have on the ratio of genetic makeup in F2 generation, if F1 individual is married to an unrelated individual of the same genotype. (1)	3
31	A. What is the fundamental difference between hypermetropia and myopia in terms of the optical experience of a person? B. The diagram below shows a special case of an eye defect. (i) What is the defect that is shown in the figure? (ii) State one cause for such a defect? (iii) Explain with reason if a concave lens can be used to correct the defect. 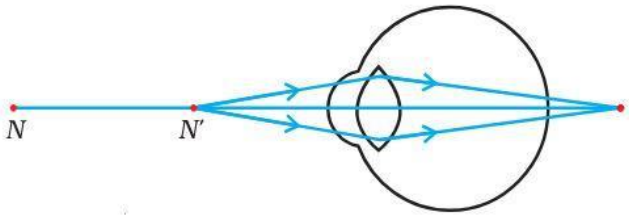 - - - - - - - - - - - - - - *For visually impaired students* A. What is the fundamental difference between hypermetropia and myopia in terms of the optical experience of a person? B. What are the causes of myopia in the human eye?	3
32	A. State the relationship between the resistance R of a wire to its length l and cross sectional area A. Use the mathematical symbols to arrive at the final formula. B. Using the formula define the resistivity of a material.	3
33	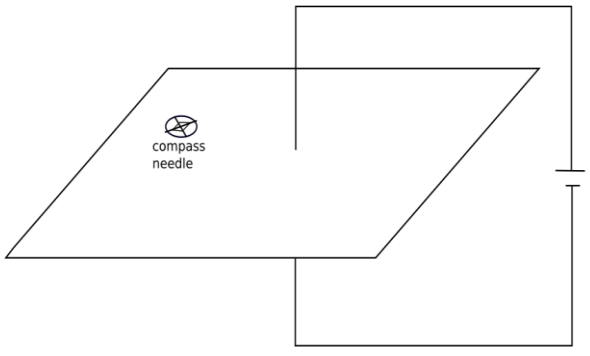 Mona was doing an experiment with a magnetic compass and a straight current-carrying wire. She observed that as she moved the compass away from the current-carrying wire, the deflection of the compass needle reduced. A. Explain why the deflection of the compass needle reduced as Mona moved away the compass needle from the current carrying wire.	3

	B. Mention one thing that could have changed in the circuit of the wire that could increase the deflection of the needle. C. Explain with reason what will be the direction of the magnetic field associated with the wire for the case described by the above figure. - - - - - - - - - - - - - - *For visually impaired students* A. Explain why the deflection of the compass needle reduced as Mona moved away the compass needle from the current carrying wire. B. Mention one thing that could have changed in the circuit of the wire that could increase the deflection of the needle. C. Explain with reason how the direction of the magnetic field associated with the wire changes if the polarity of battery reversed.	
Section-D Question No. 34 to 36 are long answer questions.		
34	*Attempt either option A or B.* A. (i) "Keerthi thinks that Substitution reaction occurs in saturated Hydrocarbons, on the contrary Krishi thinks, it occurs in unsaturated Hydrocarbons." Justify with valid reasoning whose thinking is correct. (ii) "Methane and Propane and their Isomers are used as fuels" Comment. Draw the electron dot structure of the immediate lower homologue of Propane. Give any two characteristics of homologues of a given homologous series. (iii) A mixture of oxygen and ethyne is burnt for welding. Can you predict why a mixture of ethyne and air is not used? **OR** B. (i) 'A' & 'B' are sodium salts of long-chain carboxylic acid and long chain Sulphonic acid respectively. Which one of A or B will you prefer as a cleansing agent while using underground water (hand pump water)? Give the reason for your answer. (ii) Elaborate on the process of cleansing action. Illustrate micelle with the help of labelled diagram. (iii) Write the chemical equation of the preparation of soap from an ester CH_3COOCH_3. What is the name of this process?	5
35	*Attempt either option A or B.* A. The image below shows a banana plant which is growing with the help of suckers. These suckers are small plant stem outgrowths which can be separated from the main plant and planted separately and they will grow into a new plant subsequently.	5

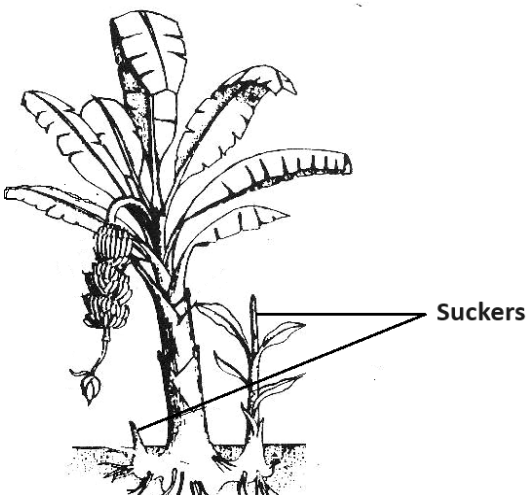

Fig.-1-Parts-of-Banana-plant-FAO-2021.png (623×609) (wp.com)

(i) Give the name and type of reproduction that is shown in the image above. (1)

(ii) List two advantages the farmer will have on using the type of reproduction mentioned above. (2)

(iii) The above plant produces male flowers. Explain how this plant will be involved in the process of pollination. (1)

(iv) Why is the offspring of this banana plant not absolutely identical to its parent plant? (1)

- - - - - - - - - - - - - -

For visually impaired students

A. A banana plant is growing with the help of suckers. These suckers are small plant stem outgrowths which can be separated from the main plant and planted separately and they will grow into a new plant subsequently.

(i) Give the name and type of reproduction. (1)

(ii) List two advantages the farmer will have on using the type of reproduction mentioned above. (2)

(iii) The above plant produces only male flower. Explain how this plant will be involved in the process of pollination. (1)

(iv) Why is the offspring of this banana plant not absolutely identical to its parent plant? (1)

OR

B. The image below shows a developing fetus in the mother's womb. The developing fetus is connected to the placenta by means of umbilical cord. The Umbilical vein and artery run inside the umbilical cord.

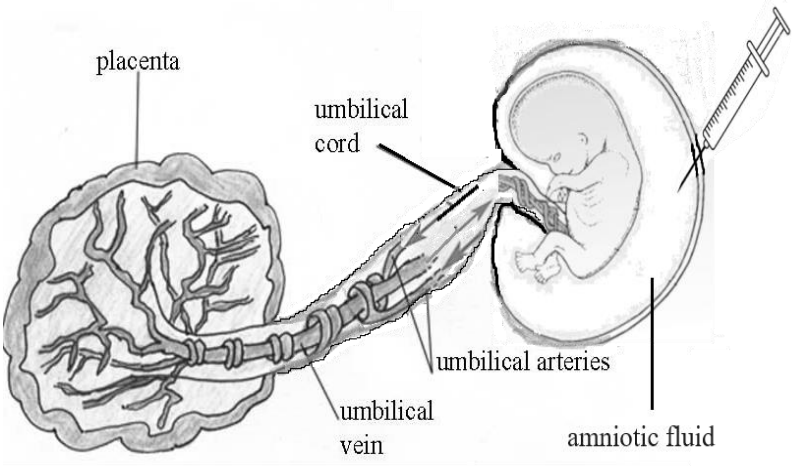

(i) Name two substance that moves through the blood vessels. (1)
(ii) If the placenta has less villi how will it affect the baby's growth? (1)
(iii) Name the region where the embryo develops inside the female body. Explain how this region is adapted for nourishing the baby. (1)
(iv) Some of the fetal cells fall off into the amniotic fluid and can be collected by careful procedure. The cells were screened and found to contain XY chromosome. (2)
a) What is the sex of the foetus?
b) How is this prenatal sex determination misused?

- - - - - - - - - - - - - -

For visually impaired students

B. A developing fetus is connected to the placenta by means of umbilical cord. The Umbilical vein and artery run inside the umbilical cord.
(i) Name two substance that moves through the blood vessels. (1)
(ii) If the placenta has less villi how will it affect the baby's growth? (1)
(iii) Name the region where the embryo develops inside the female body. Explain how this region is adapted for nourishing the baby. (1)
(iv) Some of the fetal cells fall off into the amniotic fluid and can be collected by careful procedure. The cells were screened and found to contain XY chromosome.
a) What is the sex of the foetus?
b) How is this prenatal sex determination misused? (2)

36	*Attempt either option A or B.* A. 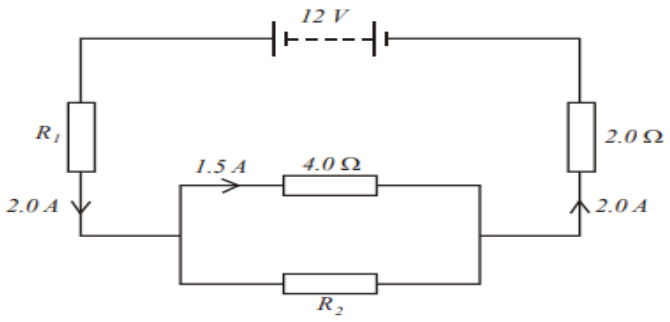 	5

The above circuit is a part of an electrical device. Use the information given in the question to calculate the following.

(i) Potential Difference across R_2.
(ii) Value of the resistance R_2.
(iii) Value of resistance R_1

OR

B.

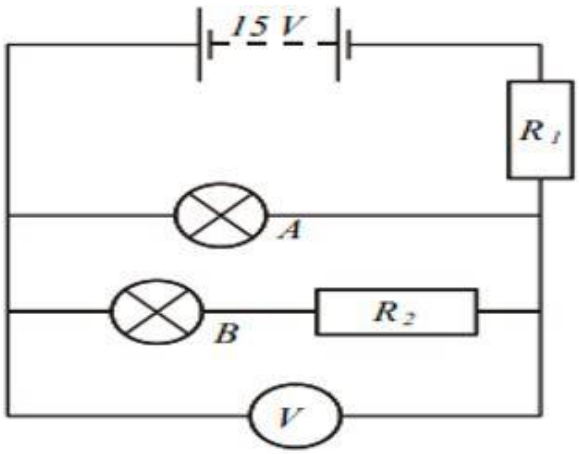

As shown in the figure above A and B are two lamps. Lamp A is rated at 12 V, 24W. Lamp B is rated at 6.0 V. When lamp B operates at its rated voltage, the current in it is 3.0 A. The values of R_1 and R_2 are chosen so that both lamps operate at their rated voltages.
Based on the information given, answer the following.

(i) Calculate the current in Lamp A.
(ii) State and give reason for the reading of the Voltmeter.
(iii) Calculate the resistance of R_2.
(iv) Find the value of the resistance R_1.

- - - - - - - - - - - - - -

For visually impaired students

A.

(i) State the law and write the formula connecting the electric current flowing through a conductor and voltage applied across it.
(ii) In a household five fans each of 100W are used for 4 hours and an electric press of 500W for 2 hours every day. Calculate the cost of using the fans and electric press for 60 days if the cost of 1 unit of electrical energy is Rs. 6.5.

OR

B.

(i) State Joules law of heating and write its mathematical expression.
(ii) Two resistors of resistances 2Ω and 4Ω are connected in
   a) series
   b) parallel
   with a battery of given potential difference. Compute the ratio of total quantity of heat produced in the combination in the two cases if the total voltage and time are kept the same for both.

Section – E

Question No. 37 to 39 are case-based/data -based questions.

37	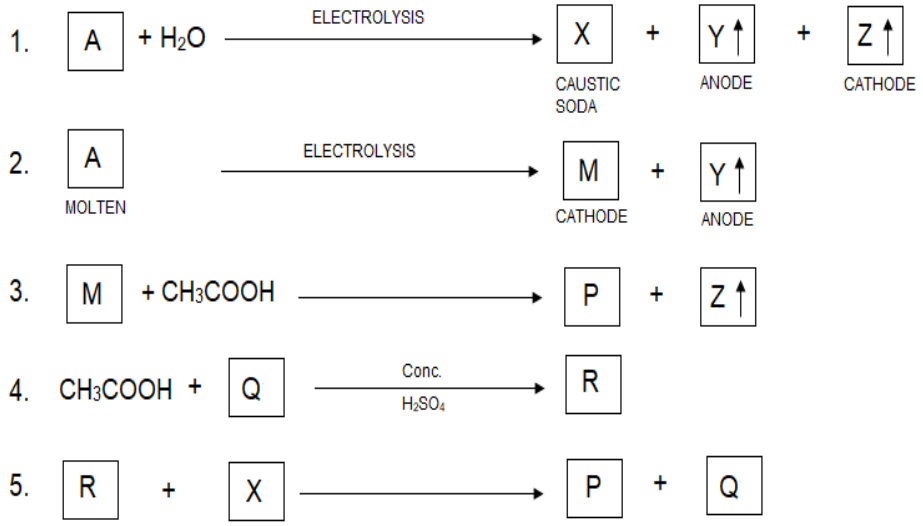 A. Derive the names of A, Y, Z, M, P & R *Attempt either subpart B or C.* B. Improvise an activity to test Z. **OR** C. Name the process in which compounds X, Y & Z are formed from A. Justify your response. - - - - - - - - - - - - - - *For visually impaired students* A. Distinguish between ethanol and ethanoic acid experimentally. *Attempt either subpart B or C.* B. Give the IUPAC name of the first member of Alkene which is formed by addition of conc. sulphuric acid to it. Illustrate the change with the help of a chemical equation. **OR** C. "All combustion reactions are oxidation but all oxidation reactions are not combustion." Justify.	4
38	Mohan and Rohit observed that shoots of a plant growing in shade bend towards the sunlight. Whereas, leaves of 'Touch me not' plant fold and droop soon after touching. They were curious to know how these movements occur in plants.	4



A. Shoots of a plant bending towards light



B. Folding of leaves Touch me not plant

In order to help them understand the movements in the plants, answer the following questions:

Attempt either subpart A or B.

A. What causes the bending of shoots in the plants as shown in figure A?

OR

B. What causes the folding of the leaves in 'Touch me not' plant as shown in figure B? (2)

C. Compare the movement of growth of the pollen tube towards ovule with the movements shown in part A of the above figure. (1)

D. Compare the movement shown in figure B with the movement of body parts in the animals. (1)

- - - - - - - - - - - - - -

For visually impaired students

During a field trip, Mohan and Rohit observed that shoots of sunflower plants bend towards the sunlight. Whereas, leaves of 'Touch me not' plant begin to fold and droop soon after touching even during the day. They were curious to know how these movements occur in plants.

Attempt either subpart A or B.

A. What causes the bending of shoots in the sunflower plants towards sunlight?

OR

B. What causes the folding of the leaves in 'Touch me not' plants when touched by hand? (2)

	C. Compare the movement of growth of the pollen tube towards ovule with the bending of shoots of sunflower plant towards sunlight. (1) D. Compare the movement in folding of leaves of 'Touch me not' plants with the movement of body parts in the animals. (1)	
39	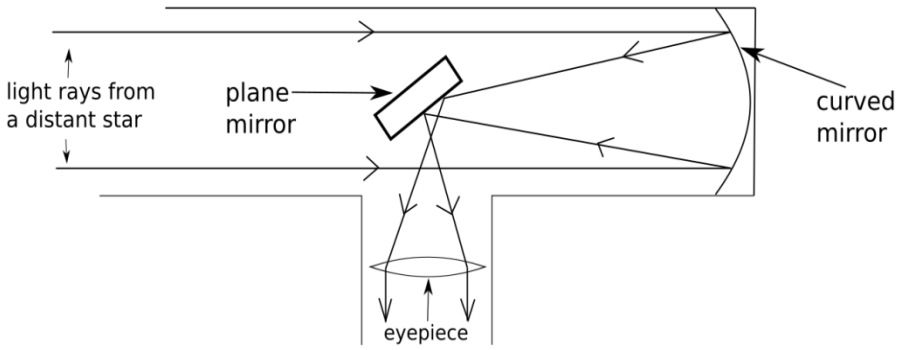 The above image is that of a reflecting telescope. Reflecting telescopes revolutionised our ways of looking into the sky. They employ mirrors to gather and focus light, rather than relying solely on lenses as in their refracting counterparts. These telescopes utilise precisely shaped and polished mirrors to capture incoming light and reflect it to a focal point, where it forms an image for observation. A. What kind of image of the star is seen by the observer at the eyepiece? B. What kind of mirror is used in this reflecting telescope? *Attempt either subpart C or D.* C. Explain with reason what kind of optical device (type of lens or mirror) that is used at the eyepiece. **OR** D. What is the role of the plane mirror in the telescope? - - - - - - - - - - - - - - *For visually impaired students* Azim Taraporewala was a traveller and science enthusiast. During one of his travels he found himself on the edge of an island without any mode of communication. As he had read in many stories, he thought he would light a fire on the beach and travelling boats or ships could see that fire and come to give him a ride. He had run out of lighters and match-sticks but had a reading glass. Being a science enthusiast he knew some tricks and used that lens and a scrap of paper to light a fire, with the help of scorching rays from the sun. A. Which lens can be used by Azim to create the fire? B. What property of the lens helps Azim to create the fire? *Attempt either subpart C or D.* C. List two more uses of this kind of lens. **OR**	4

	D. Explain with reason the condition under which the lens can form both real as well as virtual images.	

****

MARKING SCHEME
2024 -25
Class X Science (086)

Section-A		
1	A. 2,2,4	1
2	B. a – (iii), b – (i), c – (iv), d – (ii)	1
3	A. C_2H_5OH **Alternate question for VI** A. Dilute acid	1
4	C. A has a pH greater than 7 and B has a pH less than 7	1
5	C. Displacement reaction	1
6	C. X is a non-metal and Y is a metal.	1
7	B. Cooking of food	1
8	D. carbon dioxide in human cells	1
9	B. contraction of left ventricle.	1
10	D. Longer small intestine.	1
11	C. Posture and balance.	1
12	D. sex is not genetically determined in snails.	1
13	B. A ray passing through the centre of curvature and incident obliquely.	1
14	C. Red Violet	1
15	C. It utilizes 10% of light energy and transfers the rest to the next trophic level.	1
16	B. Enrichment of oxygen in the atmosphere.	1
17	C. A is true but R is false	1
18	A. Both A and R are true, and R is the correct explanation of A.	1
19	B. Both A and R are true, and R is not the correct explanation of A	1
20	D. A is false but R is true.	1

Section-B

21 — 2

A. Exothermic Displacement reaction/Redox reaction. (0.5)
Heat is evolved or a More reactive element displaces a less reactive element or aluminium reduces iron (II) oxide to iron (0.5)

B. Double displacement / Precipitation reaction (0.5)
As there is an exchange of ions between reactants and products / (Yellow) precipitate (of Lead iodide) is formed (0.5)

22 — 2

S. No.	Feature	Alveoli	Nephron
1	Structure and location	Balloon like structures present at the terminal ends of bronchioles in lungs	Tubular structure present in kidneys
2	Function	Exchange of gases	Filtration of blood to form urine

23 — 2

Students to attempt either option A or B.

A. Steps of synthesis of glucose in plants:

- Absorption of light energy by chlorophyll
- Conversion of light energy to chemical energy and splitting of water molecules into hydrogen and oxygen
- Reduction of carbon dioxide into carbohydrates.
- Desert plants take up carbon dioxide at night and prepare an intermediate which is acted upon by the energy absorbed by the chlorophyll during the day. (0.5 x 4)

OR

B.

- Salivary amylase – breaks down starch which is a complex molecule to sugar.
- Pepsin – Helps to digest proteins in stomach.
- Trypsin – It helps in digesting proteins to amino acids.
- Lipase – Breaking down of emulsified fats to fatty acids and glycerol. (0.5 x 4)

24 — 2

A. The lens is a convex lens.
B. The image is virtual.
C. Magnification for lens = $\frac{v}{u} = \frac{h_i}{h_o} = 2$.

$\frac{-30cm}{u} = 2$

Hence u = -15 cm

- - - - - - - - - - - -

For visually impaired students

A. concave lens (1)
B. correction of myopia and peepholes of doors or any other correct alternative. (1)

25	*Student to attempt either A or B.* A. P = VI (1) = 230 × 3.5 = 805 W I $\propto \frac{1}{R}$, so half the resistance means double the current. Therefore, current in Y = 7.0 A. (1) **OR** B. For series total resistance is R+2R = 3R (0.5) $P_1 = \frac{V^2}{3R}$. (0.5) For parallel total Resistance is $\frac{2R}{3}$. (0.5) $P_2 = \frac{V^2}{2R/3} = \frac{3V^2}{2R}$. $\frac{P_1}{P_2} = \frac{2}{9}$. (0.5) - - - - - - - - - - - - *For visually impaired students* A. The resistance will be lowest/minimum if all the resistors are connected in parallel. The equivalent resistance in parallel combination is given by (0.5) $$\frac{1}{R_{eqv}} = \frac{1}{R_1} + \frac{1}{R_2} + \frac{1}{R_3} + \frac{1}{R_4}$$ (0.5) Substituting the values, we get $$\frac{1}{R_{eqv}} = \frac{1}{3} + \frac{1}{6} + \frac{1}{9} + \frac{1}{12}$$ (0.5) $$= \frac{12+6+4+2}{36} = \frac{24}{36} = \frac{2}{3}$$ $$R_{eqv} = \frac{3}{2} = 1.5\,\Omega$$ (0.5) **OR** B. $P = V \times I$ (0.5) $I = \frac{P}{V} = \frac{1000}{220} = 4.54\,A$ (0.5) We will be using fuse B with is rated as 5A. This is because it will be able to sustain the current (4.54 A) passing through it. Whereas fuse A will melt and break the circuit as the current exceeds its rating. (1)	2
26	Pesticide is non-biodegradable/keep getting accumulated at each trophic level, persist for longer time/ and thus last trophic level has highest concentration/ humans will have the highest concentration of pesticides/leads to bio-magnification. (any 2 points) - - - - - - - - - - - - *For visually impaired students*	2

	Cabbage/plant-> rabbit-> snake-> owl (Any other relevant food chain) (1) Pesticides are non-biodegradable and persist for long. So when humans consume plants or any animal that consume this plant, the pesticide enters the food chain and keeps getting accumulated at each trophic level, thus the organism in the last trophic level-human being has the highest concentration of pesticide and this is called **biological magnification.** (1)	
Section-C		
27	A. Aqueous solution of magnesium oxide turns red litmus to blue. Aluminium oxide is amphoteric and insoluble in water. Thus, it does not change the colour of either blue or red litmus. **OR** Magnesium oxide reacts with acid only whereas Aluminium oxide reacts with both acids and bases, being amphoteric in nature. (1) B. $2Cu_2S + 3O_2(g) \xrightarrow{Heat} 2Cu_2O(s) + 2SO_2(g)$ $2Cu_2O + Cu_2S \xrightarrow{Heat} 6Cu(s) + SO_2(g)$ (1+1) - - - - - - - - - - - - *For visually impaired students* A. Certain metals (like aluminium/ copper) are used for making cooking utensils as they are good conductors of heat and have high melting points. (0.5 + 0.5) B. Hydrogen gas is not evolved when a metal reacts with nitric acid. This is because HNO3 is a strong oxidising agent. It oxidises the H_2 produced to water and itself gets reduced to any of the nitrogen oxides (N_2O, NO, NO_2). But magnesium (Mg) and manganese (Mn) react with very dilute HNO_3 to evolve H_2 gas. (1+1)	3
28	*Students to attempt either A or B.* A. (i) X = $NaHCO_3$; Z = Na_2CO_3 (0.5+0.5) (ii) Decomposition reaction (0.5) (iii) Solution A (0.5) (iv) Increasing order or H+ ions C<B<A (1) **OR** B. (i) As bee sting is acidic and wasp sting is basic. (1) (ii) To change the nature of soil to (neutral or basic). (1) (iii) To protect sculptures from the effects of certain gases present in environment and acid rain. (1)	3
29	• In plants, the water is absorbed by the plants from the soil through the roots. Xylem tissue of the roots, stems and leaves are interconnected to form a continuous system of water conducting channels. (1) • During the day, when stomata are open, the transpiration pull becomes	3

	the major driving force for the movement of water in the xylem. (1) ● Evaporation of water molecules from the stomata creates a suction which pulls water from the xylem cells of roots to the stem and then to the leaves. (1)	
30	(Any letter which clearly indicated dominant and recessive ears, example, L or E or any other) A. LL × ll F1= Ll Ll X Ll 1LL:2Ll:1ll. (2) B. No change in ratio/the ratio of F2 generation will still be 1LL:2Ll:1ll/ ratio will be the same. As the cross is still between a pure dominant and recessive allele/ genes/ traits/characters /as shown in the cross above. (1)	3
31	A. Hypermetropia is a defect that causes difficulty in focusing on near objects, with clearer vision observed for distant objects. In Myopia distant objects appear blurry while near objects are seen clearly. (1) B. (i) The image shows a case of hypermetropia. (0.5) (ii) shortening of the eyeball or focal length of the eye lens becomes too long. (0.5) (iii) No the concave lens would diverge the rays coming to the eyeball and will push the image even further, but a convex lens should be used which will help to converge the rays and create the image at the exact place on the retina. (1) - - - - - - - - - - - - <u>*For visually impaired students*</u> A. Hypermetropia is a defect that causes difficulty in focusing on near objects, with clearer vision observed for distant objects. In Myopia distant objects appear blurry while near objects are seen clearly. (1) B. High converging power of eye lens, elongation of eye-ball. (2)	3
32	A. $R \propto l$ $R \propto \frac{l}{A}$ $R = \rho \frac{l}{A}$. (1.5) B. $R = \rho \frac{l}{A}$ $\rho = R\frac{A}{l}$ for A =1m^2 and l =1m, we have ρ = R Hence resistivity is the resistance offered by a wire of length 1 m having a cross sectional area of 1 m^2 . (1.5)	3
33	A. Magnetic field strength is inversely proportional to the distance from the current carrying wire. Hence when Mona moved the compass away from	3

	the current carrying wire, the magnetic effect was less on it and hence the deflection was less. (1) B. Magnetic field strength is directly proportional to the current in the wire. So, Mona could increase the current in the circuit to observe a greater deflection in the compass needle. (1) C. The battery suggests that the current is going from top of the plane to the bottom of the plane. Using the right hand thumb rule we can say that the magnetic field will be clockwise. (1) - - - - - - - - - - - - *For visually impaired students* A. Magnetic field strength is inversely proportional to the distance from the current carrying wire. Hence when Mona moved the compass away from the current carrying wire, the magnetic effect was less on it and hence the deflection was less. (1) B. Magnetic field strength is directly proportional to the current in the wire. So, Mona could increase the current in the circuit to observe a greater deflection in the compass needle. (1) C. When the polarity of the battery is reversed, the direction of the current flowing in the wire and the direction of the magnetic field will also be reversed. (1)	
Section-D		
34	*Student to attempt either option A or B.* A. (i) Keerthi's thinking is correct as substitution reactions occur in saturated hydrocarbons, hydrogen atoms are replaced with heteroatoms in saturated hydrocarbons. Whereas in unsaturated hydrocarbons an addition reaction occurs, simple molecules are added across double and/or triple bonds. (1) (ii) Methane and propane undergo combustion reaction in presence of oxygen and produce large amount of energy. (1) The lower homologue of propane is ethane has the following electron dot structure: 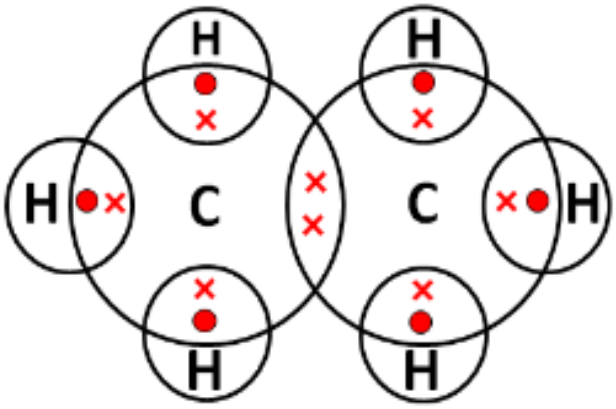 (1)	5

	ANY TWO CHARACTERISTICS - Difference in -CH2- / 14u molecular mass of any two adjacent homologues. - Same general formula/ functional group - Similar chemical properties - Gradual change in physical properties (1) (iii) The mixture of ethyne and oxygen in sufficient amounts undergoes complete combustion to fire a clean blue flame. In pressure of insufficient supply of oxygen or in presence of air, ethyne does not undergo complete combustion and produces sooty flame. (1) **OR** B. (i) 'B' is preferred for cleansing action. The calcium and magnesium salts present in underground water are precipitated with carboxylic acids. The Ca^{++} and Mg^{++} salts of sulphonic acid are soluble in water. 'B' is a more effective cleansing agent in presence of Ca and Mg salts. (1) (ii) • Soaps are molecules in which the two ends have differing properties, one is hydrophilic, that is, it dissolves in water, while the other end is hydrophobic, that is, it dissolves in hydrocarbons. • The molecules of soap are sodium or potassium salts of long-chain carboxylic acids. The ionic end of soap dissolves in water while the carbon chain dissolves in oil. The soap molecules, thus form structures called micelles where one end of the molecules is towards the oil droplet while the ionic end faces outside. This forms an emulsion in water. The soap micelle thus helps in dissolving the dirt in water and we can wash our clothes clean. 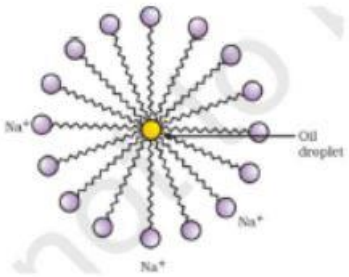 (Labelled fig - 1 + 2) (iii) $CH_3(CH_2)_{16}COOR + NaOH \longrightarrow CH_3(CH_2)_{16}COONa + ROH$ The process is saponification. (0.5 + 0.5)	
35	*Students to attempt either option A or B.* A. (i) Vegetative propagation/ asexual reproduction. (0.5+0.5) (ii) More crops in same time interval, genetically identical, flower fruit faster, no need to depend on pollinators. (1+1) (iii) Cross pollination, the pollen from anther will be transferred the stigma of another banana plant using agents like wind, water, or insects etc. (0.5+0.5)	5

	(iv) There would be minor changes/some variation during the process of copying of the DNA. (1) - - - - - - - - - - - - *For visually impaired students* (i) Vegetative propagation/ asexual reproduction. (0.5+0.5) (ii) More crops in same time interval, genetically identical, flower fruit faster, no need to depend on pollinators. (1+1) (iii) Cross pollination, the pollen from anther will be transferred the stigma of another banana plant using agents like wind, water, or insects etc. (0.5+0.5) (iv) There would be minor changes/some variation during the process of copying of the DNA. (1) **OR** B. (i) Nutrients/glucose/oxygen/waste. (any two) (1) (ii) less surface area for nutrients (glucose/oxygen) to pass from mother to embryo slow growth. (1) (iii) uterus; has thick lining with rich supply of blood to nourish the embryo. (1) (iv) a) male child b) misused as if the foetus is female, some people engage in aborting the child leading to female foeticide. (2) - - - - - - - - - - - - *For visually impaired students* A. (i) Nutrients/glucose/oxygen/waste. (any two) (1) (ii) less surface area for nutrients (glucose/oxygen) to pass from mother to embryo slow growth. (1) (iii) uterus; has thick lining with rich supply of blood to nourish the embryo. (1) (iv) a) male child b) misused as if the foetus is female, some people engage in aborting the child leading to female foeticide. (2)	
36	*Students to attempt either option A or B.* A. (i) p.d. across 4 Ω resistor = p.d. Across R2 as both are in parallel. (0.5) 1.5 (A) × 4 (Ω) = 6 V (0.5) (ii) Total Current through 4 Ω and R_2 = 2.0 A (given). Current through 4 Ω = 1.5 A (given) (0.5) Hence current through R_2 = 2-1.5= 0.5 A	5

Using Ohm's law for R_2 we get (0.5)
6 V= 0.5 A x R_2
Hence R_2 = 6/0.5 = 12 Ω (0.5)

(iii) p.d. across R_1 = Total p.d. - (p.d. across R_2) - (p.d. across 2.0 Ω) (0.5)
p.d. across 2.0 Ω = 2x2 = 4 V
p.d. across R_2 = 6 V (calculated before) (0.5)

Hence p.d. across R_1 = 12 − 6 − 4 = 2 V (0.5)
Current through R_1 = 2A (0.5)
Using Ohm's Law, we get
R_1 = 2V/2A = 1Ω (0.5)

Alternative method

Total Resistance = R1 + $\frac{(4\ x\ 12)}{(4+12)}$ + 2 = 12V/2 A = 6Ω (0.5)
R1 = 6 – (3 + 2) = 1 Ω (0.5)

OR

B.

(i) Use of P = IV (0.5)
I = P ÷ V = 24 W ÷ 12V
Current in lamp A – 2 A (0.5)

(ii) Voltmeter reading = 12 V (0.5)
Lamp A and Lamp B are in parallel.
Hence p.d. across the arm containing A = p.d. across arm containing B
= 12 V (from a) (0.5)

(iii) p.d. across R_2 + p.d. across B = 12 V. (0.5)
p.d. across B = 6 V (given)
Hence p.d. across R_2 = 12 V - 6 V = 6V (0.5)

Current through R_2 = Current through B = 3A (given) (0.5)
Use of R = V/I
R_2 =6V/3A = 2Ω (0.5)

(iv) Current through R_1 = Total Current = 3A+2A = 5A
p.d. across R_1 = 15V -12 V = 3V (0.5)
R_1=3V/5A = 0.6 Ω (0.5)

- - - - - - - - - - - -

For visually impaired students

A.

(i) Ohm's Law is the law, which states that the electric current (I) flowing through a conductor is directly proportional to the voltage (V) applied across it and inversely proportional to the resistance (R) of the conductor. Mathematically, it can be represented as: (1)

$V \propto I$
$V = IR$ (1)

(ii) Let the energy consumed by the fans be E_f and the energy consumed by the electric press be E_p.

	• $E_f = P \times t = \frac{100 \times 4}{1000} = 0.4\ kWh$ • $E_p = P \times t = \frac{500 \times 2}{1000} = 1\ kWh$ (1) • Total energy consumed in 1 day = $E_p + E_f = 1.4\ kWh$ Total energy consumed in 60 days = $1.4 \times 60 = 84\ kWh$. Total cost = $84 \times Rs.6.5 = Rs.546.00$ (2) **OR** B. (i) Joule's Law of Heating states that the amount of heat produced in a conductor is directly proportional to the square of the electric current passing through it, the resistance of the conductor, and the time for which the current flows. Mathematically, it can be expressed as $H = I^2Rt$ • *H* is the heat produced (in joules), • *I* is the electric current (in amperes), • *R* is the resistance of the conductor (in ohms), • *t* is the time for which the current flows (in seconds). (ii) Let the equivalent resistance in series be denoted by R_s and that for parallel be denoted by R_p. Total voltage of the circuit is given by V in both cases and the time is denoted by t. • $R_s = 2 + 4 = 6\Omega$ • $\frac{1}{R_p} = \frac{1}{2} + \frac{1}{4} = \frac{3}{4}, R_p = \frac{4}{3}$ • $H_s = \frac{V^2}{R_s}t, H_p = \frac{V^2}{R_p}t$ • $\frac{H_s}{H_p} = \frac{R_p}{R_s} = \frac{2}{9}$	
SECTION – E		
37	A. A - Sodium chloride Y - Chlorine gas, Z - Hydrogen gas, M - Sodium metal, P - Sodium ethanoate & R - Ethyl ethanoate/ester (0.5 X 6 = 3) <u>*Student to attempt either subpart B or C.*</u> B. Any activity similar to the given figure (1)	4

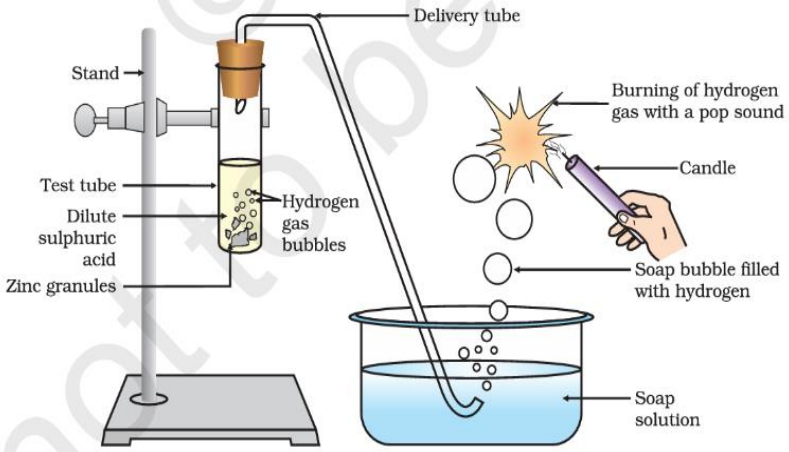

Figure 2.1 *Reaction of zinc granules with dilute sulphuric acid and testing hydrogen gas by burning*

OR

C. Chlor alkali process

The process is called the chlor-alkali process because of the products formed from chlorine and alkali for sodium hydroxide. (1)

- - - - - - - - - - -

For visually impaired students

A.

Ethanoic Acid	**Ethanol**
Reaction with carbonates and hydrogen carbonates: Ethanoic acid reacts with carbonates and hydrogen carbonates to give rise to salt, carbon dioxide and water. The slat produced is commonly called Sodium acetate. $2CH_3COOH + Na_2CO_3 \longrightarrow 2CH_3COONa + H_2O + CO_2$	No reaction

B. Ethene

C_2H_5OH-------Hot Conc. Sulphuric acid$\longrightarrow CH_2=CH_2 + H_2O$

C. In combustion reactions oxygen is added hence all combustion reactions are oxidation, whereas in oxidation reactions, energy may or may not be released (along with the products), hence all oxidation reactions are not combustion reactions.

38	*Students to attempt either subpart A or B.* A. ● Bending of shoots of plants is a response to the stimulus and a directional, growth-related movement. ● When growing plants detect sunlight, a hormone called auxin, synthesized at shoot tip helps the cells to grow longer. ● When light is coming from one side of the plant, auxin diffuses to the shady side of the shoot. ● This concentration of auxin stimulates the cells of the shoot to grow	4

longer on the side of the shoot which is away from the light. Thus, plant appears to bend towards light. (0.5 x 4 =2)

OR

B.

- Leaves of 'Touch me not' plant respond to the stimulus by showing growth independent movement.
- These plants use electrical–chemical means to convey the information from cell to cell.
- Movement happens at a point different from the point of touch.
- Plant cells change shape by changing the amount of water in them, resulting in swelling or shrinking, and therefore in changing shape.

(0.5 x 4 =2)

C. Growth of pollen tubes towards the ovule is an example of chemotropism whereas bending of shoots towards sunlight is an example of phototropism. (1)

D.

i) Although both plants and animals show electrical–chemical means to convey the information from cell to cell but unlike nerve cells in animals there is no specialized tissue in plants for conduction of information. (0.5)

ii) In animal cells, change in shape occurs because of the specialized proteins found in muscle cells; plant cells change shape by changing the amount of water in them. (0.5)

- - - - - - - - - - - -

For visually impaired students

Students to attempt either subpart A or B.

A.

- Bending of shoots of plants is a response to the stimulus and a directional, growth-related movement.
- When growing plants detect sunlight, a hormone called auxin, synthesized at shoot tip helps the cells to grow longer.
- When light is coming from one side of the plant, auxin diffuses to the shady side of the shoot.
- This concentration of auxin stimulates the cells of the shoot to grow longer on the side of the shoot which is away from the light. Thus, plant appears to bend towards light. (0.5 x 4 =2)

OR

B.

- Leaves of 'Touch me not' plant respond to the stimulus by showing growth independent movement.
- These plants use electrical–chemical means to convey the information from cell to cell.

	● Movement happens at a point different from the point of touch. ● Plant cells change shape by changing the amount of water in them, resulting in swelling or shrinking, and therefore in changing shape. (0.5 x 4 =2) C. Growth of pollen tubes towards the ovule is an example of chemotropism whereas bending of shoots towards sunlight is an example of phototropism. (1) D. i) Although both plants and animals show electrical–chemical means to convey the information from cell to cell but unlike nerve cells in animals there is no specialized tissue in plants for conduction of information. (0.5) ii) In animal cells, change in shape occurs because of the specialized proteins found in muscle cells; plant cells change shape by changing the amount of water in them. (0.5)	
39	A. Real Image (the final image is formed due to the lens at the eye-piece) (1) B. Concave Mirror (1) <u>*Student to attempt either subpart C or D.*</u> C. A converging lens is used at the eyepiece to collect the rays from the plane mirror and help the viewer to see a real erect image of the star. (2) **OR** D. The plane mirror laterally inverts the image formed by the curved mirror and its position helps to direct the rays towards the eye-piece. (2) - - - - - - - - - - - - <u>*For visually impaired students*</u> A. Convex lens. (1) B. Converging property. The lens can converge parallel rays to one point. (1) <u>*Student to attempt either subpart C or D*</u> C. To correct hypermetropia, lenses of telescopes, microscopes and slide projectors. (2) **OR** D. If the object is kept between the optical centre and the focus the image obtained is virtual, rest in all cases the image is real.	4

****